Weathermaster®
48P2,P3,P4,P5030-100
Single Package Gas Heating and Electric Cooling Units with Direct Spark Ignition and *Comfort*Link Controls

Installation Instructions

CONTENTS

Page

GENERAL 1
SAFETY CONSIDERATIONS 1
INSTALLATION 2
Step 1 — Jobsite Survey 2
Step 2 — Place Unit 2
Step 3 — Roof Mount Unit 3
Step 4 — Slab Mount Unit 3
Step 5 — Install Curb Gasketing 3
Step 6 — Install Field-Fabricated Ductwork 15
Step 7 — Rig Unit 16
Step 8 — Connect Condensate Drain 16
Step 9 — Install Outdoor Hoods (Units without Optional High-Capacity Power Exhaust) 32
- UNIT SIZES 030-050
- UNIT SIZES 055-100

Step 10 — Install Economizer Hoods (Units with Optional High-Capacity Power Exhaust) 33
- INSTALL SMALL HOODS
- INSTALL LARGE HOODS

Step 11 — Route Field Wiring 35
- UNIT SIZES 030-060
- UNIT SIZES 070-100

Step 12 — Make Field Electrical Connections . . . 35
- POWER WIRING

Step 13 — Connect Air Pressure Tubing 58
- VARIABLE FRQUENCY DRIVE
- MODULATING POWER EXHAUST
- RETURN FAN POWER EXHAUST

Step 14 — Remove Supply-Fan Shipping Brackets 60
Step 15 — Remove Optional Return-Fan Shipping Brackets 60
Step 16 — Connect Gas Piping 61
Step 17 — Configure Optional Staged Gas or Modulating Gas Control 61
Step 18 — Install Flue/Inlet Hoods and Baffles . . 62
Step 19 — Install Supply-Air Thermistors (Staged and Modulating Gas Units Only) 62
Step 20 — Install Optional Motormaster® V Control 66
Step 21 — Install Unit Accessories 68
CONTROLS INSTALLATION 68
Constant Volume (CV) Units 68
- CONTROL WIRING

Variable Air Volume (VAV) Units 68
Option and Accessory Control Wiring 68
Carrier Comfort Network® (CCN) Interface 73
Optional UPC Open Installation 74
Smoke Control Modes 75

GENERAL

This installation instruction contains basic unit installation information, including installation of thermostats and remote temperature sensors.

For additional information and service instructions, refer to the Controls and Troubleshooting literature.

A factory-installed optional integral economizer and high-capacity power exhaust is available on size 075-100 units.

A factory-installed optional return fan is available on size 075-100 units.

The staged gas control (SGC) option adds the capability to control the rooftop unit's gas heating system to a specified supply-air temperature set point for purposes of tempering a cool mixed-air condition.

SAFETY CONSIDERATIONS

Installation and servicing of air-conditioning equipment can be hazardous due to system pressure and electrical components. Only trained and qualified service personnel should install, repair, or service air-conditioning equipment.

Untrained personnel can perform basic maintenance functions of cleaning coils and filters and replacing filters. All other operations should be performed by trained service personnel. When working on air-conditioning equipment, observe precautions in the literature, tags and labels attached to the unit, and other safety precautions that may apply.

Follow all safety codes, including ANSI (American National Standards Institute) Z223.1. Wear safety glasses and work gloves. Use quenching cloth for unbrazing operations. Have fire extinguisher available for all brazing operations.

⚠ WARNING

Before performing service or maintenance operations on unit, turn off main power switch to unit. Electrical shock could cause personal injury.

FOR YOUR SAFETY
WHAT TO DO IF YOU SMELL GAS

Do not try to light any appliance. Do not touch any electrical switch; do not use any phone in your building. Immediately call your gas supplier from a neighbor's phone. Follow the gas supplier's instructions. If you cannot reach your gas supplier, call the fire department.

FOR YOUR SAFETY

Do not store or use gasoline or other flammable vapors and liquids in the vicinity of this or any other appliance.

⚠ WARNING

Improper installation, adjustment, alteration, service, or maintenance can cause injury or property damage. Refer to this manual. For assistance or additional information, consult a qualified installer, service agency, or the gas supplier.

Manufacturer reserves the right to discontinue, or change at any time, specifications or designs without notice and without incurring obligations.

⚠ CAUTION

Disconnect gas piping from units when leak testing at pressures greater than 0.5 psig. Pressures greater than 0.5 psig will cause gas valve damage resulting in a hazardous condition. If gas valve is subjected to pressure greater than 0.5 psig, it must be replaced. When pressure testing field-supplied gas piping at pressures of 0.5 psig or less, the unit connected to such piping must be isolated by manually closing the gas valve.

⚠ WARNING

DO NOT USE TORCH to remove any component. System contains oil and refrigerant under pressure.

To remove a component, wear protective gloves and goggles and proceed as follows:

a. Shut off electrical power to unit.
b. Recover refrigerant to relieve all pressure from system using both high-pressure and low pressure ports.
c. Traces of vapor should be displaced with nitrogen and the work area should be well ventilated. Refrigerant in contact with an open flame produces toxic gases.
d. Cut component connection tubing with tubing cutter and remove component from unit. Use a pan to catch any oil that may come out of the lines and as a gage for how much oil to add to the system.
e. Carefully unsweat remaining tubing stubs when necessary. Oil can ignite when exposed to torch flame.

Failure to follow these procedures may result in personal injury or death.

⚠ CAUTION

DO NOT re-use compressor oil or any oil that has been exposed to the atmosphere. Dispose of oil per local codes and regulations. DO NOT leave refrigerant system open to air any longer than the actual time required to service the equipment. Seal circuits being serviced and charge with dry nitrogen to prevent oil contamination when timely repairs cannot be completed. Failure to follow these procedures may result in damage to equipment.

⚠ WARNING

CARBON-MONOXIDE POISONING HAZARD

Failure to follow instructions could result in severe personal injury of death due to carbon-monoxide poisoning, if combustion products infiltrate into the building.

Check that all openings in the outside wall around the vent (and air intake) pipe(s) are sealed to prevent infiltration of combustion products into the building.

Check that furnace vent (and air intake) terminal(s) are not obstructed in any way during all seasons.

→

⚠ WARNING

FIRE HAZARD

Failure to follow this warning could result in personal injury, death, and/or property damage.

Inlet pressure tap set screw must be tightened and 1/8 in. NPT pipe plug must be installed to prevent gas leaks.

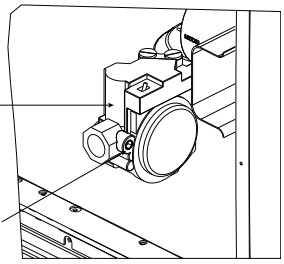

⚠ WARNING

FIRE HAZARD

Failure to follow this warning could result in personal injury, death, and/or property damage.

Manifold pressure tap set screw must be tightened and 1/8 in. NPT pipe plug must be installed to prevent gas leaks.

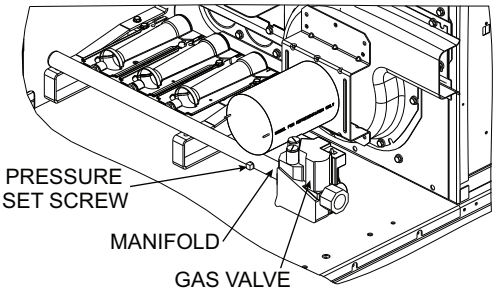

INSTALLATION

Step 1 — Perform Jobsite Survey — Complete the following checks before installation.

1. Consult local building codes and the NEC (National Electrical Code) (ANSI/NFPA [American National Standards Institute/National Fire Protection Association] 70) for special installation requirements.
2. Determine unit location (from project plans) or select unit location.
3. Check for possible overhead obstructions which may interfere with unit lifting or rigging.

⚠ CAUTION

Do not lift unit with forklift truck. Move unit with overhead rigging only.

Step 2 — Place Unit — Inspect unit for transportation damage. File claim with transportation agency.

Provide clearance around and above unit for airflow, safety, and service access. Do not restrict top (area above condenser fans) in any way. Allow at least 6 ft on all sides for rated performance, code compliance, and service. On units equipped with power exhaust option, high velocity air is exhausted out the hood. Unit should be positioned with at least 10 ft clearance between the exhaust hood and any obstruction.

Check unit dimensional drawings for unit arrangement and minimum performance and service clearances.

Do not install unit in an indoor location. Do not locate air inlets near exhaust vents or other sources of contaminated air.

Although unit is weatherproof, guard against water from higher level runoff and overhangs.

Level by using unit frame as a reference. Physical data is shown in Tables 1-11.

Step 3 — Roof Mount Unit — Check building codes for weight distribution requirements. Unit weight is shown in Tables 1-3 and 7. Unit may be mounted on class A, B, or C roofing material.

ROOF CURB — Assemble and install roof curb as described in instructions shipped with the accessory. Accessory roof curb and information required to field fabricate a roof curb is shown in Fig. 1-5. Install insulation, cant strips, roofing and counter flashing as required. For unit condensate drain to function properly, curb must be level or within tolerances shown in Fig. 1-5.

STEEL BEAMS — If roof curb is not used, support unit with steel beams along its entire length and then support steel as required. As a minimum, unit must be supported across its width at each lifting lug location.

Step 4 — Slab Mount Unit — Provide a level concrete slab that extends beyond unit cabinet at least 6 inches. Make a slab 8 in. thick with 4 in. above grade. Use gravel apron in front of condenser coil air inlet to prevent grass and foliage from obstructing airflow. Ensure that slab is of sufficient height to allow for condensate trap as described in Step 8 on page 16.

Step 5 — Install Curb Gasketing

SIZE 030-060 UNITS — After ductwork has been connected to the roof curb, attach adhesive-backed gasketing on all end rails, cross rails, and duct rails. Be sure all joints and corners of gasket are square and flush to prevent possible water leaks. Follow all applicable building codes.

SIZE 070-100 UNITS — After ductwork has been connected to the roof curb, apply gasket material ($^1/_2$-in. thick x $1^1/_2$-in. wide neoprene) where indicated.

Single-Thickness Gasketing (See Fig. 6-8 for Item Numbers) — Apply gasketing in the following places:

1. Along both side rails (1) — 2 places, full length
2. Along return air end rail (2) — 1 place
3. Around return air internal duct flange (3) — 1 or 2 places
4. Around supply air internal duct flanges (4) — 3 places

Double-Thickness Gasketing (See Fig. 6 and 8 and Detail A-A) — Locate a line $9^3/_4$-in. from the supply air end of the accessory curb. Apply a double-thickness of gasket material along line per detail A-A.

NOTE: Do not apply gasket material along the outside edge of the curb (area "X"). This pan area of the curb extends out beneath the end of the unit's air handler section; applying gasket here develops a potential water trap area on top of the curb.

Condenser Section Roof Curb (See Fig. 7) — Apply single-thickness gasket along both side rails (5).

Table 1 — Physical Data 48P2,P3,P4,P5030-050

BASE UNIT	48P2,P3,P4,P5030		48P2,P3,P4,P5035	
NOMINAL CAPACITY (tons)	30		35	
OPERATING WEIGHT (lb)	Standard Chassis	Extended Chassis	Standard Chassis	Extended Chassis
Base Unit				
Low Heat	5310	5810	5410	5910
High Heat	5440	5940	5540	6040
With Economizer				
Low Heat	5610	6110	5710	6210
High Heat	5740	6240	5840	6340
COMPRESSORS	Scroll			
Quantity...Type	1...ZP154/1...ZP154		1...ZP182/1...ZP182	
Oil Charge (oz) per Compressor	110		110	
Number of Refrigerant Circuits	2		2	
REFRIGERANT	R-410A			
Operating Charge (lb), Ckt 1/Ckt 2				
Standard Evaporator Coil	15.4/14.8		17.1/17.5	
Standard Evaporator with Humidi-MiZer®	15.4/24.9		17.1/27.6	
Alternate High-Capacity Evaporator Coil	17.2/16.0		N/A	
Alternate High-Capacity Evaporator with Humidi-MiZer	17.2/26.1		N/A	
CONDENSER COILS	Aluminum Novation® Heat Exchanger with Microchannel Coils			
Quantity	1		1	
Total Face Area (sq ft)	33.3		33.3	
EVAPORATOR COILS				
Quantity	1			
Total Face Area (sq ft)	32.1			
Refrigerant Feed Device...No. per Circuit	TXV...1			
Standard Evaporator Coils				
Rows...Fins/in.	3...15.0		4...15.0	
Fin Type	Double Wavy		Double Wavy	
Tube Type	Cross Hatched		Cross Hatched	
Alternate, High-Capacity Evaporator Coils				
Rows...Fins/in.	4...15.0		N/A	
Fin Type	Double Wavy		N/A	
Tube Type	Cross Hatched		N/A	
HEATING SECTION	Low Heat	High Heat	Low Heat	High Heat
Number of Heat Exchangers	7	14	7	14
Input (MBtuh)	325	650	325	650
Output (MBtuh) (Vertical/Horizontal)	263/260	527/520	263/260	527/520
Temperature Rise Range (F)	10-40	25-55	10-40	25-55
Efficiency (%) (Vertical/Horizontal)	81/80	81/80	81/80	81/80
Burner Orifice Diameter				
Quantity (in. ...drill no.)	7 (.1285...30)	14 (.1285...30)	7 (.1258...30)	14 (.1258...30)
Manifold Pressure (in. wg)	3.5	3.5	3.5	3.5
Line Pressure (in. wg) (min...max)	5.0...13.0	5.0...13.0	5.0...13.0	5.0...13.0
Firing Stages	2	2	2	2
Number of Gas Valves	1	2	1	2
CONDENSER FANS	Propeller Type			
Quantity...Diameter (in.)	2...30		2...30	
Nominal Cfm	18,000		19,500	
Motor Hp...Rpm	1.0...1140		1.0...1140	
SUPPLY FAN	Centrifugal 25 x 25 in.			
Nominal Cfm	12,000		14,000	
AHRI/DOE Rated Cfm	9,000		8,750	
Maximum Allowable Cfm	15,000		15,000	
Maximum Allowable Rpm	900		900	
Shaft Diameter at Pulley (in.)	$1^{11}/_{16}$		$1^{11}/_{16}$	

SUPPLY-FAN MOTOR AND DRIVE	(Any motor available on any unit)				
Motor Hp	7.5	10	15	20	25
Motor Frame Size	213T	215T	254T	256T	284T
Efficiency at Full Load (%)					
High Efficiency	88.5	89.5	91.0	91.0	91.7
Premium Efficiency	91.7	91.7	93.0	93.6	93.6
Fan Pulley Pitch Diameter (in.)	13.7	13.7	13.7	13.7	13.7
Motor Pulley Pitch Diameter (in.)	3.4	4.3	4.9	5.5	6.5
Resulting Fan Speed (rpm)	438	549	626	703	830
Belts Quantity...Type	2...BX60	2...5VX630	2...5VX630	2...5VX630	2...5VX650
Center Distance Range (in.)	17.74-14.30	17.74-14.30	17.63...14.01	17.63...14.01	16.63...12.87

OPTIONAL POWER EXHAUST*		Centrifugal, 18 x 15 in. (Any motor available on any unit)			
Quantity...Motor Hp		2...3.0	2...5.0	2...7.5	2...10
Motor Frame Size	High Eff	56HZ	184T	213T	215T
	Prem Eff	182T	184T	213T	215T
Efficiency at Full Load (%) High/Premium		81.0/88.5	87.5/89.5	88.5/91.7	89.5/91.7
Fan Pulley Pitch Diameter (in.)	High Eff	11	10.4	12	12
	Prem Eff	11.0	10.4	12	12
Motor Pulley Pitch Diameter Range (in.)	High Eff	4.1-3.1	4.7-3.7	6.0-4.8	7.0-5.8
	Prem Eff	4.1-3.1	4.7-3.7	6.0-4.8	7.0-5.8
Motor Pulley Pitch Diameter Factory Setup (in.)		4.1	4.2	5.4	6.4
Blower Shaft Diameter at Pulley (in.)		$1^{7}/_{16}$	$1^{7}/_{16}$	$1^{7}/_{16}$	$1^{7}/_{16}$
Fan Rpm Range		500-656	621-785	717-882	854-1000
Factory Setup Fan Rpm		656	703	800	927
Maximum Allowable Rpm		1000	1000	1000	1000

FILTERS		
Standard Efficiency Throwaway (Standard)		
Quantity...Size (in.)	8...20 x 25 x 2, 8...20 x 20 x 2	8...20 x 25 x 2, 8...20 x 20 x 2
Medium Efficiency (30%) Pleated (Optional)		
Quantity...Size (in.)	8...20 x 25 x 2, 8...20 x 20 x 2	8...20 x 25 x 2, 8...20 x 20 x 2
High Efficiency (90%) Bag Filters with High Velocity Prefilters (Opt)		
Quantity...Size (in.)		
Bag Filter	6...20 x 24 x 22, 6...20 x 20 x 22	6...20 x 24 x 22, 6...20 x 20 x 22
Prefilter	12...16 x 20 x 2, 3...20 x 24 x 2	12...16 x 20 x 2, 3...20 x 24 x 2
MERV 15 Cartridge Filters with High Velocity Prefilters (Opt)		
Quantity...Size (in.)		
Cartridge Filter	6...20 x 24 x 12, 6...20 x 20 x 12	6...20 x 24 x 12, 6...20 x 20 x 12
Prefilter	12...16 x 20 x 2, 3...20 x 24 x 2	12...16 x 20 x 2, 3...20 x 24 x 2
OUTSIDE AIR SCREENS		
Standard Hood (25%) Quantity...Size (in.)	None	None
OPTIONAL ECONOMIZER FILTER	Aluminum Frame, Permanent	
Quantity...Size (in.)	5...20 x 20 x 2 2...20 x 25 x 1	5...20 x 20 x 1 2...20 x 25 x 1

LEGEND

AHRI — Air Conditioning, Heating and Refrigeration Institute
DOE — Department of Energy
MBtuh — Btuh in Thousands
TXV — Thermostatic Expansion Valve

* See Table 9 — Power Exhaust Fan Drive Data on page 9 for more information.

Table 1 — Physical Data 48P2,P3,P4,P5030-050 (cont)

BASE UNIT	48P2,P3,P4,P5040		48P2,P3,P4,P5050	
NOMINAL CAPACITY (tons)	40		50	
OPERATING WEIGHT (lb)	Standard Chassis	Extended Chassis	Standard Chassis	Extended Chassis
Base Unit				
Low Heat	5810	6310	6025	6525
High Heat	5940	6440	6155	6655
With Economizer				
Low Heat	6110	6610	6325	6825
High Heat	6240	6740	6455	6955
COMPRESSORS	Scroll			
Quantity...Type	2...ZP103/1...ZP182		2...ZP120/2...ZP137	
Oil Charge (oz) per Compressor	110		110	
Number of Refrigerant Circuits	2		2	
REFRIGERANT	R-410A			
Operating Charge (lb), Ckt 1/Ckt 2				
Standard Evaporator Coil	21.6/26.7		29.4/29.0	
Standard Evaporator with Humidi-MiZer®	21.6/39.1		29.4/41.4	
Alternate High-Capacity Evaporator Coil	31.1/37.2		35.2/36.5	
Alternate High-Capacity Evaporator with Humidi-MiZer	31.1/49.6		35.2/48.9	
CONDENSER COILS	Aluminum Novation® Heat Exchanger with Microchannel Coils			
Quantity	2		2	
Total Face Area (sq ft)	66.7		66.7	
EVAPORATOR COILS				
Quantity	1			
Total Face Area (sq ft)	45.5			
Refrigerant Feed Device...No. per Circuit	TXV...2			
Standard Evaporator Coils				
Rows...Fins/in.	3...15.0		4...15.0	
Fin Type	Double Wavy		Double Wavy	
Tube Type	Cross Hatched		Cross Hatched	
Alternate, High-Capacity Evaporator Coils				
Rows...Fins/in.	6...16.0		6...16.0	
Fin Type	Double Wavy		Double Wavy	
Tube Type	Cross Hatched		Cross Hatched	
HEATING SECTION	Low Heat	High Heat	Low Heat	High Heat
Number of Heat Exchangers	7	14	7	14
Input (MBtuh)	325	650	325	650
Output (MBtuh) (Vertical/Horizontal)	263/260	527/520	263/260	527/520
Temperature Rise Range (F)	10-40	25-55	10-40	25-55
Efficiency (%) (Vertical/Horizontal)	81/80	81/80	81/80	81/80
Burner Orifice Diameter				
Quantity (in. ...drill no.)	7 (.1285...30)	14 (.1285...30)	7 (.1285...30)	14 (.1285...30)
Manifold Pressure (in. wg)	3.5	3.5	3.5	3.5
Line Pressure (in. wg) (min...max)	5.0...13.0	5.0...13.0	5.0...13.0	5.0...13.0
Firing Stages	2	2	2	2
Number of Gas Valves	1	2	1	2
CONDENSER FANS	Propeller Type			
Quantity...Diameter (in.)	3...30		4...30	
Nominal Cfm	30,000		38,000	
Motor Hp...Rpm	1.0...1140		1.0...1140	
SUPPLY FAN	Centrifugal 25 x 25 in.			
Nominal Cfm	16,000		20,000	
AHRI/DOE Rated Cfm	12,000		12,500	
Maximum Allowable Cfm	20,000		20,000	
Maximum Allowable Rpm	900		900	
Shaft Diameter at Pulley (in.)	$1^{11}/_{16}$		$1^{11}/_{16}$	

SUPPLY-FAN MOTOR AND DRIVE	(Any motor available on any unit)					
Motor Hp	7.5	10	15	20	25	30*
Motor Frame Size	213T	215T	254T	256T	284T	286T
Efficiency at Full Load (%)						
High Efficiency	88.5	89.5	91.0	91.0	91.7	92.4
Premium Efficiency	91.7	91.7	93.0	93.6	93.6	93.6
Fan Pulley Pitch Diameter (in.)	13.7	13.7	13.7	13.7	13.7	12.5
Motor Pulley Pitch Diameter (in.)	3.4	4.3	4.9	5.5	6.5	6.5
Resulting Fan Speed (rpm)	438	549	626	703	830	910
Belts Quantity...Type	2...BX60	2...5VX630	2...5VX630	2...5VX630	2...5VX650	3...5VX630
Center Distance Range (in.)	17.74-14.30	17.74-14.30	17.63...14.01	17.63...14.01	16.63...12.87	16.63...12.87

OPTIONAL POWER EXHAUST†		Centrifugal, 18 x 15 in. (Any motor available on any unit)			
Quantity...Motor Hp		2...3.0	2...5.0	2...7.5	2...10
Motor Frame Size	High Eff	56HZ	184T	213T	215T
	Prem Eff	182T	184T	213T	215T
Efficiency at Full Load (%) High/Premium		81.0/88.5	87.5/89.5	88.5/91.7	89.5/91.7
Fan Pulley Pitch Diameter (in.)	High Eff	11	10.4	12	12
	Prem Eff	11.0	10.4	12	12
Motor Pulley Pitch Diameter Range (in.)	High Eff	4.1-3.1	4.7-3.7	6.0-4.8	7.0-5.8
	Prem Eff	4.1-3.1	4.7-3.7	6.0-4.8	7.0-5.8
Motor Pulley Pitch Diameter Factory Setup (in.)		4.1	4.2	5.4	6.4
Blower Shaft Diameter at Pulley (in.)		$1^{7}/_{16}$	$1^{7}/_{16}$	$1^{7}/_{16}$	$1^{7}/_{16}$
Fan Rpm Range		500-656	621-785	717-882	854-1000
Factory Setup Fan Rpm		656	703	800	927
Maximum Allowable Rpm		1000	1000	1000	1000

FILTERS		
Standard Efficiency Throwaway (Standard)		
Quantity...Size (in.)	8...20 x 25 x 2, 8...20 x 20 x 2	8...20 x 25 x 2, 8...20 x 20 x 2
Medium Efficiency (30%) Pleated (Optional)		
Quantity...Size (in.)	8...20 x 25 x 2, 8...20 x 20 x 2	8...20 x 25 x 2, 8...20 x 20 x 2
High Efficiency (90%) Bag Filters with High Velocity Prefilters (Opt)		
Quantity...Size (in.)		
Bag Filter	6...20 x 24 x 22, 6...20 x 20 x 22	6...20 x 24 x 22, 6...20 x 20 x 22
Prefilter	12...16 x 20 x 2, 3...20 x 24 x 2	12...16 x 20 x 2, 3...20 x 24 x 2
MERV 15 Cartridge Filters with High Velocity Prefilters (Opt)		
Quantity...Size (in.)		
Cartridge Filter	6...20 x 24 x 12, 6...20 x 20 x 12	6...20 x 24 x 12, 6...20 x 20 x 12
Prefilter	12...16 x 20 x 2, 3...20 x 24 x 2	12...16 x 20 x 2, 3...20 x 24 x 2
OUTSIDE AIR SCREENS		
Standard Hood (25%) Quantity...Size (in.)	None	None
OPTIONAL ECONOMIZER FILTER	Aluminum Frame, Permanent	
Quantity...Size (in.)	5...20 x 20 x 2 2...20 x 25 x 1	5...20 x 20 x 1 2...20 x 25 x 1

LEGEND

AHRI — Air Conditioning, Heating and Refrigeration Institute
DOE — Department of Energy
MBtuh — Btuh in Thousands
TXV — Thermostatic Expansion Valve

* 460-3-60 only.
†See Table 9 — Power Exhaust Fan Drive Data on page 9 for more information.

Table 2 — Physical Data 48P2,P3,P4,P5055-070

BASE UNIT	48P2,P3,P4,P5055		48P2,P3,P4,P5060		48P2,P3,P4,P5070	
NOMINAL CAPACITY (tons)	55		60		70	
OPERATING WEIGHT (lb)	Standard Chassis	Extended Chassis	Standard Chassis	Extended Chassis	Standard Chassis	Extended Chassis
Base Unit						
Low Heat	7810	8360	7865	8415	8205	8755
High Heat	7940	8490	7995	8545	8335	8885
With Economizer						
Low Heat	8340	8890	8395	8945	8735	9285
High Heat	8470	9020	8525	9075	8865	9415
COMPRESSORS	Scroll					
Quantity...Type	2...ZP137/2...ZP137		2...ZP154/2...ZP154		1...ZP154,1...ZP182/1...ZP154,1...ZP182	
Oil Charge (oz) per Compressor	110		110		110	
Number of Refrigerant Circuits	2		2		2	
REFRIGERANT	R-410A					
Operating Charge (lb), Ckt 1/Ckt 2						
Standard Evaporator Coil	37.6/37.9		37.6/37.9		39.5/42.0	
Standard Evaporator with Humidi-MiZer®	37.6/50.3		37.6/50.3		39.5/54.4	
Alternate High-Capacity Evaporator Coil	43.5/42.8		44.6/43.5		49.0/50.0	
Alternate High-Capacity Evaporator with Humidi-MiZer	43.5/55.2		44.6/55.9		49.0/62.4	
CONDENSER COILS	Aluminum Novation® Heat Exchanger with Microchannel Coils					
Quantity	2		2		4	
Total Face Area (sq ft)	66.7		66.7		106.7	
EVAPORATOR COILS						
Quantity	2					
Total Face Area (sq ft)	61.5					
Refrigerant Feed Device...No. per Circuit	TXV...2					
Standard Evaporator Coils						
Rows...Fins/in.	4...15		4...15		4...15	
Fin Type	Double Wavy		Double Wavy		Double Wavy	
Tube Type	Cross Hatched		Cross Hatched		Cross Hatched	
Alternate, High-Capacity Evaporator Coils						
Rows...Fins/in.	6...16		6...16		6...16	
Fin Type	Double Wavy		Double Wavy		Double Wavy	
Tube Type	Cross Hatched		Cross Hatched		Cross Hatched	
HEATING SECTION	Low Heat	High Heat	Low Heat	High Heat	Low Heat	High Heat
Number of Heat Exchangers	14	21	14	21	14	21
Input (MBtuh)	650	975	650	975	650	975
Output (MBtuh) (Vertical/Horizontal)	527/520	790/780	527/520	790/780	527/520	790/780
Temperature Rise Range (F)	10-40	20-50	10-40	20-50	10-40	20-50
Efficiency (%) (Vertical/Horizontal)	81/80	81/80	81/80	81/80	81/80	81/80
Burner Orifice Diameter						
Quantity (in. ...drill no.)	14 (.1285...30)	21 (.1285...30)	14 (.1285...30)	21 (.1285...30)	14 (.1285...30)	21 (.1285...30)
Manifold Pressure (in. wg)	3.5	3.5	3.5	3.5	3.5	3.5
Line Pressure (in. wg) (min...max)	5.0...13.0	5.0...13.0	5.0...13.0	5.0...13.0	5.0...13.0	5.0...13.0
Firing Stages	2	2	2	2	2	2
Number of Gas Valves	2	3	2	3	2	3
CONDENSER FANS	Propeller Type					
Quantity...Diameter (in.)	4...30		4...30		4...30	
Nominal Cfm	36,000		36,600		39,000	
Motor Hp...Rpm	1.0...1140		1.0...1140		1.0...1140	
SUPPLY FAN	Centrifugal 30 x 27.5 in.					
Nominal Cfm	22,000		24,000		28,000	
AHRI/DOE Rated Cfm	16,500		15,000		17,500	
Maximum Allowable Cfm	25,000		30,000		30,000	
Maximum Allowable Rpm	800		800		800	
Shaft Diameter at Pulley (in.)	$1^{11}/_{16}$		$1^{11}/_{16}$		$1^{11}/_{16}$	
SUPPLY-FAN MOTOR AND DRIVE	(Any motor available on any unit)					
Motor Hp	15	20	25	30	40†	
Motor Frame Size	254T	256T	284T	286T	S324T	
Efficiency at Full Load (%)						
High Efficiency	91.0	91.0	91.7	92.4	93.0	
Premium Efficiency	93.0	93.6	93.6	93.6	94.5	
Fan Pulley Pitch Diameter (in.)	13.7	13.7	13.7	15.5	16.1	
Motor Pulley Pitch Diameter (in.)	4.5	5.1	5.5	5.9	6.7	
Resulting Fan Speed (rpm)	575	651	703	711	740	
Belts Quantity...Type	2...5VX1230	2...5VX1230	2...5VX1230	2...5VX1230	3...5VX1250	
Center Distance Range (in.)	48.25-44.00	48.25-44.00	48.50-44.25	48.50-44.25	48.25-44.00	
OPTIONAL POWER EXHAUST*	Centrifugal, 18 x 15 in. (Any motor available on any unit)					
Quantity...Motor Hp	2...5		2...7.5		2...10	
Motor Frame Size	184T		213T		215T	
Efficiency at Full Load (%) High/Premium	87.5/89.5		88.5/91.7		89.5/91.7	
Resulting Fan Rpm	740		820		920	
Maximum Allowable Rpm	1000		1000		1000	
FILTERS						
Standard Efficiency Throwaway (Standard)						
Quantity...Size (in.)	12...20 x 25 x 2, 12...20 x 20 x 2		12...20 x 25 x 2, 12...20 x 20 x 2		12...20 x 25 x 2, 12...20 x 20 x 2	
Medium Efficiency (30%) Pleated (Optional)						
Quantity...Size (in.)	12...20 x 25 x 2, 12...20 x 20 x 2		12...20 x 25 x 2, 12...20 x 20 x 2		12...20 x 25 x 2, 12...20 x 20 x 2	
High Efficiency (90%) Bag Filters with High Velocity Prefilters (Optional)						
Quantity...Size (in.)						
Bag Filter	6...24 x 24 x 22, 6...24 x 20 x 22		6...24 x 24 x 22, 6...24 x 20 x 22		6...24 x 24 x 22, 6...24 x 20 x 22	
Prefilter	6...24 x 24 x 2, 6...20 x 24 x 2		6...24 x 24 x 2, 6...20 x 24 x 2		6...24 x 24 x 2, 6...20 x 24 x 2	
MERV 15 Cartridge Filters with High Velocity Prefilters (Optional)						
Quantity...Size (in.)						
Cartridge Filter	6...24 x 24 x 12,, 6...24 x 20 x 12		6...24 x 24 x 12,, 6...24 x 20 x 12		6...24 x 24 x 12, 6...24 x 20 x 12	
Prefilter	6...24 x 24 x 2, 6...20 x 24 x 2		6...24 x 24 x 2, 6...20 x 24 x 2		6...24 x 24 x 2, 6...20 x 24 x 2	
OUTSIDE AIR SCREENS						
Standard Hood (25%) Quantity...Size (in.)	4...25 x 16 x 1, 2...20 x 16 x 1		4...25 x 16 x 1, 2...20 x 16 x 1		4...25 x 16 x 1, 2...20 x 16 x 1	
OPTIONAL ECONOMIZER FILTER	Aluminum Frame, Permanent					
Quantity...Size (in.)	12...16 x 25 x 1, 2...16 x 20 x 1		12...16 x 25 x 1, 2...16 x 20 x 1		12...16 x 25 x 1, 2...16 x 20 x 1	

LEGEND

AHRI — Air Conditioning, Heating and Refrigeration Institute
DOE — Department of Energy
MBtuh — Btuh in Thousands
TXV — Thermostatic Expansion Valve

*See Table 9 — Power Exhaust Fan Drive Data on page 9 for more information.

Table 3 — Physical Data 48P2,P3,P4,P5075-100

BASE UNIT	48P2,P3,P4,P5075		48P2,P3,P4,P5090		48P2,P3,P4,P5100	
NOMINAL CAPACITY (tons)	75		90		100	
OPERATING WEIGHT (lb)	Standard Chassis	Extended Chassis	Standard Chassis	Extended Chassis	Standard Chassis	Extended Chassis
Base Unit						
Low Heat	9065	9615	9665	10,215	9685	10,235
High Heat	9195	9745	9795	10,345	9815	10,365
With Economizer						
Low Heat	9595	10,145	10,195	10,745	10,215	10,765
High Heat	9725	10,275	10,325	10,875	10,345	10,895
COMPRESSORS	Scroll					
Quantity...Type	2...ZP182/2...ZP182		3...ZP154,3...ZP154		3...ZP154,3...ZP182	
Oil Charge (oz) per Compressor	110		110		110	
Number of Refrigerant Circuits	2		2		2	
REFRIGERANT	R-410A					
Operating Charge (lb), Ckt 1/Ckt 2						
Standard Evaporator Coil	39.5/42.0		50.4/51.3		50.8/52.8	
Standard Evaporator with Humidi-MiZer®	39.5/54.0		50.4/69.1		50.8/70.6	
Alternate High-Capacity Evaporator Coil	49.0/50.0		61.5/62.9		59.3/62.8	
Alternate High-Capacity Evaporator with Humidi-MiZer	49.0/62.4		61.5/80.7		59.3/80.6	
CONDENSER COILS	Aluminum Novation® Heat Exchanger with Microchannel Coils					
Quantity	4		6		6	
Total Face Area (sq ft)	106.7		160.0		160.0	
EVAPORATOR COILS						
Quantity	2					
Total Face Area (sq ft)	61.5					
Refrigerant Feed Device...No. per Circuit	TXV...2					
Standard Evaporator Coils						
Rows...Fins/in.	4...15		4...15		4...15	
Fin Type	Double Wavy		Double Wavy		Double Wavy	
Tube Type	Cross Hatched		Cross Hatched		Cross Hatched	
Alternate, High-Capacity Evaporator Coils						
Rows...Fins/in.	6...16		6...16		6...16	
Fin Type	Double Wavy		Double Wavy		Double Wavy	
Tube Type	Cross Hatched		Cross Hatched		Cross Hatched	
HEATING SECTION	Low Heat	High Heat	Low Heat	High Heat	Low Heat	High Heat
Number of Heat Exchangers	2	3	2	3	2	3
Input (MBtuh)	650	975	650	975	650	975
Output (MBtuh) (Vertical/Horizontal)	527/520	790/780	527/520	790/780	527/520	790/780
Temperature Rise Range (F)	10-40	20-50	10-40	20-50	10-40	20-50
Efficiency (%) (Vertical/Horizontal)	81/80	81/80	81/80	81/80	81/80	81/80
Burner Orifice Diameter						
Quantity (in. ...drill no.)	7 (.1285...30)	7 (.1285...30)	7 (.1285...30)	7 (.1285...30)	7 (.1285...30)	7 (.1285...30)
Manifold Pressure (in. wg)	3.5	3.5	3.5	3.5	3.5	3.5
Line Pressure (in. wg) (Min...Max)	5.0...13.0	5.0...13.0	5.0...13.0	5.0...13.0	5.0...13.0	5.0...13.0
Number of Gas Valves	2	3	2	3	2	3
CONDENSER FAN	Propeller Type					
Quantity...Diameter (in.)	4...30		6...30		6...30	
Nominal Cfm	39,000		58,000		58,000	
Motor Hp (ea)...rpm	1.0...1140		1.0...1140		1.0...1140	
STANDARD SUPPLY FAN	Forward Curved Centrifugal 36 x 30 in.					
Nominal Cfm	30,000		36,000		40,000	
Maximum Allowable Cfm	30,000		34,000		40,000	
Maximum Allowable Rpm	680		680		680	
Shaft Diameter at Pulley (in.)	$1^{11}/_{16}$		$1^{11}/_{16}$		$1^{11}/_{16}$	
STANDARD SUPPLY-FAN MOTOR AND DRIVE	(Any motor available on any unit)					
Motor Hp	30		40	50	60	
Motor Frame Size	S268T		S324T	S326T	S364T	
Efficiency at Full Load (%)						
High Efficiency	92.4		93.0	93.0	93.6	
Premium Efficiency	93.6		94.5	94.5	95.4	
Fan Pulley Pitch Diameter (in.)	18.5		18.5	18.5	18.5	
Motor Pulley Pitch Diameter (in.)	5.3		5.7	6.5	7.1	
Resulting Fan Rpm	501		539	615	672	
Belts Quantity...Type	3...5VX1320		4...5VX1320	4...5VX1320	4...5VX1320	
Center Distance Range (in.)	47.88-45.01		47.64-44.76	47.42-44.52	47.42-44.52	
ALTERNATE, AIRFOIL FAN	Airfoil					
Nominal Airflow (cfm)	30,000		36,000		40,000	
Maximum Allowable Airflow (cfm)	30,000		36,000		40,000	
Maximum Allowable Wheel Speed (rpm)	1846		1846		1846	
Shaft Diameter at Pulley (in.)	$2^{11}/_{16}$		$2^{11}/_{16}$		$2^{11}/_{16}$	
ALTERNATE SUPPLY-FAN MOTOR AND DRIVE	(Any motor available on any unit)					
Motor Hp	30	40	50	60	75	
Motor Frame Size	S268T	S324T	S326T	S364T	365T	
Efficiency at Full Load (%)						
High Efficiency	92.4	93.0	93.0	93.6	94.1	
Premium Efficiency	93.6	94.5	94.5	95.4	95.4	
Fan Pulley Pitch Diameter (in.)	9.7	10.2	8.9	8.9	10.8	
Motor Pulley Pitch Diameter (in.)	7.5	8.7	8.1	8.7	11.1	
Resulting Fan Rpm	1353	1493	1593	1711	1799	
Belts Quantity...Type	2...5VX1150	2...5VX1180	3...5VX1150	3...5VX1150	3...5VX1230	
Center Distance Range (in.)	42.96...45.82	42.96...45.57	42.96...45.57	42.45...45.35	42.45...45.35	
OPTIONAL POWER EXHAUST*	Centrifugal, 18 x 15 in. (Any motor available on any unit.)					
Quantity...Motor Hp	2...5		2...7.5		2...10	
Motor Frame Size	184T		213T		215T	
Efficiency at Full Load (%)						
High Efficiency	87.5		88.5		89.5	
Premium Efficiency	89.5		91.7		91.7	
Fan Pulley Pitch Diameter (in.)	10.6		10.6		10.6	
Motor Pulley Pitch Diameter (in.)	4.5		5.0		5.6	
Shaft Diameter at Pulley (in.)	$1^{7}/_{16}$		$1^{7}/_{16}$		$1^{7}/_{16}$	
Resulting Fan Rpm	740		820		920	
Maximum Allowable Rpm	1000		1000		1000	
FILTERS						
Standard Efficiency Throwaway (Standard)						
Quantity...Size (in.)	12...20 x 25 x 2, 12...20 x 20 x 2		12...20 x 25 x 2, 12...20 x 20 x 2		12...20 x 25 x 2, 12...20 x 20 x 2	
30% and 65% Pleated (Optional)						
Quantity...Size (in.)	12...20 x 25 x 2, 12...20 x 20 x 2		12...20 x 25 x 2, 12...20 x 20 x 2		12...20 x 25 x 2, 12...20 x 20 x 2	
OUTSIDE AIR SCREENS						
Standard Hood (25%) Quantity...Size (in.)	4...25 x 16 x 1, 2...20 x 16 x 1		4...25 x 16 x 1, 2...20 x 16 x 1		4...25 x 16 x 1, 2...20 x 16 x 1	
OPTIONAL ECONOMIZER FILTER	Aluminum Frame, Permanent					
Quantity...Size (in.)	12...16 x 25 x 1, 2...16 x 20 x 1		12...16 x 25 x 1, 2...16 x 20 x 1		12...16 x 25 x 1, 2...16 x 20 x 1	

LEGEND

MBtuh — Btuh in Thousands
TXV — Thermostatic Expansion Valve

*See Table 5 — High-Capacity Power Exhaust Data on page 8 for more information. See Table 9 — Power Exhaust Fan Drive Data on page 9 for more information.

Table 4 — Optional Return Fan Physical Data (48P075-100 Only)

BASE UNIT	48P2,P3,P4,P5075-100			
RETURN FAN	Plenum Fan, 47.13 in. (Any motor available on any unit.)			
Quantity...Motor Hp	1...20	1...25	1...30	1...40
Motor Frame Size	256T	284T	286T	324T
Efficiency at Full Load (%) High/Premium	91.0/93.6	91.7/93.6	92.4/93.6	93.0/93.8
Fan Pulley Pitch Diameter (in.)	8.5	9.8	8.5	8.5
Motor Pulley Pitch Diameter (in.)	5.3	6.7	6.1	6.7
Shaft Diameter at Pulley (in.)	$2^{15}/_{16}$	$2^{15}/_{16}$	$2^{15}/_{16}$	$2^{15}/_{16}$
Resulting Fan Rpm	1104	1209	1271	1396
Maximum Allowable Rpm	1447	1447	1447	1447

Table 5 — Optional High-Capacity Power Exhaust Physical Data (48P075-100 Only)

BASE UNIT	48P2,P3,P4,P5075-100				
POWER EXHAUST	Centrifugal, 22 x 20 in., $1^{11}/_{16}$ in. shaft diameter (Any motor available on any unit)				
Total Hp	20	30	40	50	60
Quantity...Motor Hp	2...10	2...15	2...20	2...25	2...30
Motor Frame Size	S215T	D254T	S256T	S284T	S286T
Efficiency at Full Load (%)					
High Efficiency	89.5	91	91	91.7	92.4
Premium Efficiency	91.7	93	93.6	93.6	93.6
Fan Sheave Pitch Diameter (in.)	12.4	12.4	11.1	11.1	11.1
Motor Sheave Pitch Diameter (in.)	4.8	5.8	5.9	6.5	6.9
Resulting Fan Rpm	714	841	928	1020	1094
Maximum Allowable Rpm	1175	1175	1175	1175	1175
Belts — Quantity...Type	2...BX93	2...BX93	2...5VX950	2...5VX950	2...5VX950

Table 6 — Optional Humidi-MiZer® Coil Data

UNIT SIZE 48P	030-075	090,100
Humidi-MiZer Coil Construction	Aluminum Novation® Coil	
Quantity	1	1
Face Area (sq ft)	26.7	33.3

Table 7 — Operating Weights of Options and Accessories (lb)

OPTION OR ACCESSORY	48/50P UNIT SIZE							
	030,035	040,050	055	060	070	075	090	100
Condenser Section Roof Curb	—	—	540	540	625	625	625	625
Economizer	300*	300*	530*	530*	530*	530*	530*	530*
Power Exhaust	710*	710*	710*	710*	710*	710*	710*	710*
Barometric Relief	200	200	200	200	200	200	200	200
Double Wall Construction	700	800	900	900	900	900	900	900
Roof Curb								
Standard Length	455	495	605	605	605	605	605	605
Extended Length	545	545	1200	1200	—	—	—	—
With High-Capacity Power Exhaust	—	—	—	—	—	700	700	700
High-Efficiency Filters	20	20	20	20	20	20	20	20
Bag Filters and Cartridge Filters	35	35	40	40	40	—	—	—
Hail Guard	120	150	145	145	210	210	210	210
Inlet Guide Vanes	95	95	115	115	115	115	115	115
Variable Frequency Drive								
7.5 hp	20	20	—	—	—	—	—	—
10 hp	20	20	—	—	—	—	—	—
15 hp	35	35	35	35	35	—	—	—
20 hp	35	35	35	35	35	—	—	—
25 hp	53	53	53	53	53	—	—	—
30 hp	—	—	53	53	53	53	53	53
40 hp	—	—	53	53	53	53	53	53
50 hp	—	—	—	—	—	53	53	53
60 hp	—	—	—	—	—	53	53	53
75 hp	—	—	—	—	—	152	152	152
High-Capacity Evaporator Coil	150	300	300	300	300	300	300	300
Airfoil Fan	—	—	—	—	—	350	350	350
Humidi-MiZer® Adaptive Dehumidification System	72	72	72	72	72	72	92	92

*Includes hood.

Table 8 — Supply Fan Drive Data

HP	SHAFT DIA (in.)	SPEED (rpm)	MOTOR SHEAVE	MOTOR PITCH DIA (in.)	WHEEL SHEAVE	WHEEL PITCH DIA (in.)	QUANTITY ...BELT
Sizes 030-050							
7.5	1 3/8	438	2BK36	3.4	2B5V136	13.7	2...BX60
10	1 3/8	549	2B5V42	4.3	2B5V136	13.7	2...5VX630
15	1 5/8	626	2B5V48	4.9	2B5V136	13.7	2...5VX630
20	1 5/8	703	2B5V54	5.5	2B5V136	13.7	2...5VX630
25	1 7/8	830	2B5V64	6.5	2B5V136	13.7	2...5VX650
30*	1 7/8	910	3B5V64	6.5	3B5V124	12.5	3...5VX630
Sizes 055-070							
15	1 5/8	575	2B5V44	4.5	2B5V136	13.7	2...5VX1230
20	1 5/8	651	2B5V50	5.1	2B5V136	13.7	2...5VX1230
25	1 7/8	703	2B5V54	5.5	2B5V136	13.7	2...5VX1230
30	1 7/8	711	2B5V62	6.3	2B5V154	15.5	2...5VX1230
40	2 1/8	740	3B5V66	6.7	3B5V160	16.1	3...5VX1250
Sizes 075-100 (Forward-Curved Fan)							
30	1 7/8	501	3B5V52	5.33	B5V184	18.5	3...5VX1320
40	2 1/8	539	4B5V56	5.74	B5V184	18.5	4...5VX1320
50	2 1/8	615	4B5V64	6.54	B5V184	18.5	4...5VX1320
60	2 3/8	672	4B5V70	7.14	B5V184	18.5	4...5VX1320
Sizes 075-100 (Airfoil Fan)							
30	1 7/8	1353	2B5V74	7.5	2Q5V97	9.7	2...5VX1150
40	2 1/8	1493	2B5V86	8.7	2Q5V103	10.2	2...5VX1180
50	2 1/8	1593	3B5V80	8.1	3R5V90	8.9	3...5VX1150
60	2 3/8	1711	3B5V86	8.7	3R5V90	8.9	3...5VX1150
75	2 3/8	1799	3B5V110	11.1	3R5V109	10.8	3...5VX1230

*Sizes 040,050 only.

NOTE: Part numbers are Browning Manufacturing Corp. reference.

Table 9 — Power Exhaust Fan Drive Data

TOTAL HP	MOTOR QTY...HP	MOTOR SHAFT DIAMETER (in.)	FAN SPEED RPM	MOTOR SHEAVE		BLOWER SHEAVE		48P2,P3 UNITS		48P4,P5 UNITS	
				Part Number	Pitch Diameter (in.)	Part Number	Pitch Diameter (in.)	BELTS QTY...P/N	CENTER DISTANCE RANGE (in.)	BELTS QTY...P/N	CENTER DISTANCE RANGE (in.)
Sizes 030-050											
6*	2...3	7/8	656/500	1VL44	4.1-3.1	BK115	11	1...BX71	23.62-26.50	1...BX46	11.40-13.26
6†	2...3	1 1/8	656/500	1VP44L	4.1-3.1	BK115	11	1...BX71	23.62-26.50	1...BX46	11.40-13.26
10**	2...5	1 1/8	785/621	1VP50L	4.7-3.7	BK110	10.4	1...BX71	23.62-26.50	1...BX46	11.16-13.05
15**	2...7.5	1 3/8	882/717	1VP65	6.0-4.8	BK130	12	1...BX77	23.62-26.50	1...BX53	11.40-13.26
20**	2...10	1 3/8	1000/854	1VP75	7.0-5.8	BK130	12	1...BX79	23.62-26.50	1...BX53	11.04-12.95
Sizes 055-100											
10	2...5	1 1/8	740	2P3V45	4.5	2Q3V106	10.6	2...3VX71	22.71-26.38	2...3VX50	10.91-13.30
15	2...7.5	1 3/8	820	2P3V50	5.0	2Q3V106	10.6	2...3VX71	22.71-26.38	2...3VX50	10.78-13.20
20	2...10	1 3/8	920	2P3V56	5.6	2Q3V106	10.6	2...3VX75	22.71-26.38	2...3VX50	10.78-13.20

*High-efficiency motor option.
†Premium-efficiency motor option.
**Applies to both motor options.

NOTE: Part numbers are Browning Manufacturing Corp. reference.

Table 10 — Optional High-Capacity Power Exhaust Fan Drive Data

TOTAL HP	MOTOR QTY...HP	MOTOR SHAFT DIA. (in.)	SPEED RPM	MOTOR SHEAVE		BLOWER SHEAVE		QTY...BELT	CENTER DISTANCE RANGE (in.)
				Part Number	Pitch Diameter (in.)	Part Number	Pitch Diameter (in.)		
20	2...10	1.375	714	2B5V48	4.8	2B5V124	12.4	2...BX93	32.8 to 36.7
30	2...15	1.625	841	2B5V58	5.8	2B5V124	12.4	2...BX93	32.6 to 36.5
40	2...20	1.625	928	2B5V58	5.9	2B5V110	11.1	2...5VX950	32.6 to 36.5
50	2...25	1.875	1020	2B5V64	6.5	2B5V110	11.1	2...5VX950	32.5 to 36.3
60	2...30	1.875	1094	2B5V68	6.9	2B5V110	11.1	2...5VX950	32.5 to 36.3

Table 11 — Optional Return Fan Drive Data

TOTAL HP	MOTOR QTY...HP	MOTOR SHAFT DIA. (in.)	SPEED RPM	MOTOR SHEAVE		BLOWER SHEAVE		QTY...BELT	CENTER DISTANCE RANGE (in.)
				Part Number	Pitch Diameter (in.)	Part Number	Pitch Diameter (in.)		
20	1...20	1.625	1104	3B5V52	5.3	3R5V85	8.5	3...5VX1000	38.1 to 41.0
25	1...25	1.875	1209	3B5V66	6.7	3R5V97	9.8	3...5VX1060	38.9 to 41.8
30	1...30	1.875	1271	3B5V60	6.1	3R5V85	8.5	3...5VX1030	38.9 to 41.8
40	1...40	2.125	1396	3B5V66	6.7	3R5V85	8.5	3...5VX1060	39.9 to 42.8

NOTES:

1. ROOF CURB IS SHIPPED DISASSEMBLED.
2. ROOFCURB: 14 GA.[VA03-56] STL.
3. DIMENSIONS IN [ ] ARE MILLIMETERS.

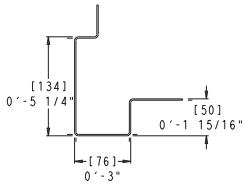

BASE RAIL CROSS SECTION
TYP ALL BASE RAILS

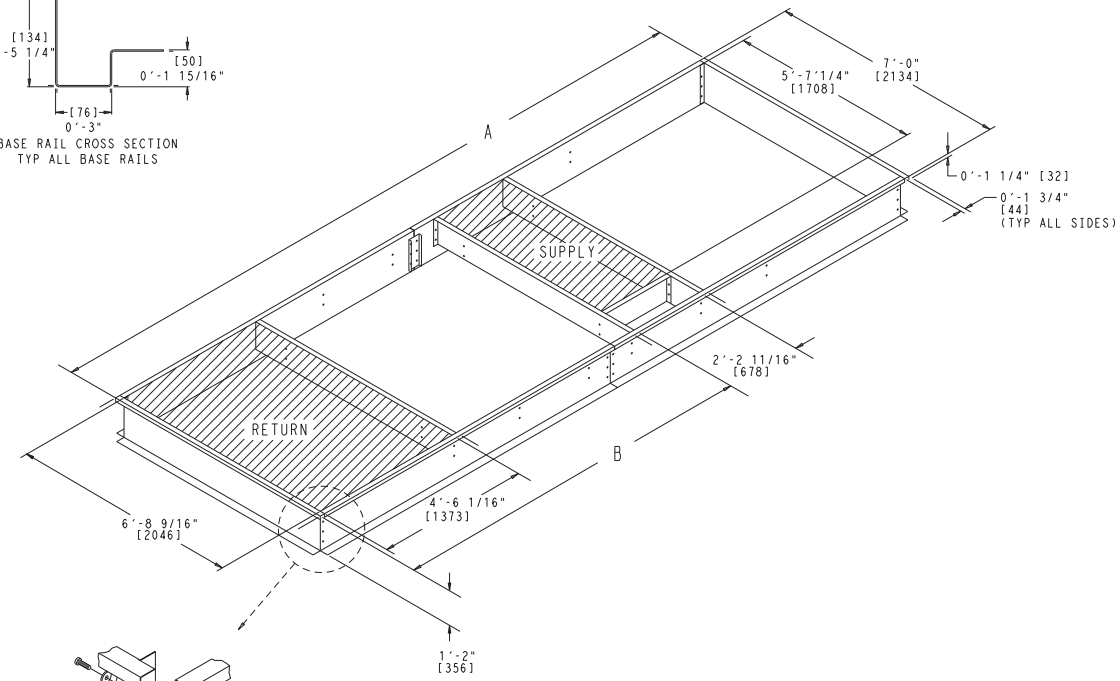

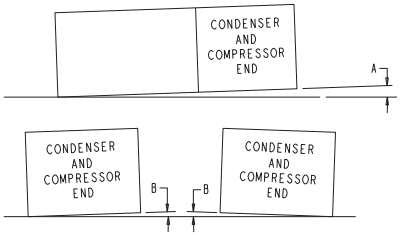

DIMENSIONS
(degrees and inches)

A		B	
DEG.	IN.	DEG.	IN.
1.0	2.0	.50	.75

UNIT LEVELING TOLERANCES
*From edge of unit to horizontal.

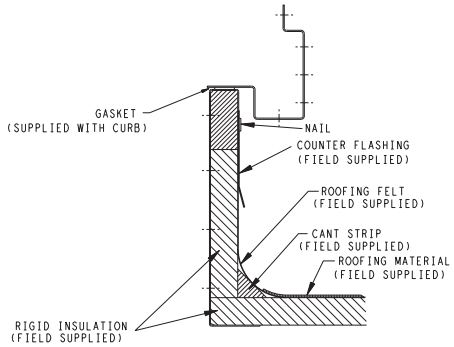

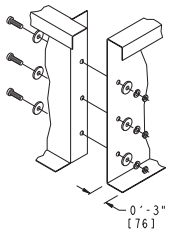

(CORNER CONNECTIONS AND
SPLICE PLATE CONNECTIONS)

UNIT TYPE	DIMENSION	UNIT SIZE 030,035	UNIT SIZE 040,050
50P VERTICAL SUPPLY & RETURN	A B	19'-2 3/8" 10'-10 3/8"	25'-9 5/8" 13'-7 1/16"
50P VERTICAL SUPPLY & RETURN W/EXTENDED CHASSIS	A B	21-3 9/16" 12'-11 9/16"	27'-10 13/16" 15'-8 7/32"
48/50P VERTICAL & HORIZONTAL SUPPLY & RETURN W/EXTENDED PLENUM	A B	20'-9 1/16" 13'-3 11/16"	27'-4 9/16" 16'-0 5/8"
48/50P VERTICAL & HORIZONTAL SUPPLY & RETURN W/EXTENDED CHASSIS & PLENUM	A B	22'-10 1/4" 15'-4 7/8"	29'-5 13/16" 18'-1 7/8"

Fig. 1 — Roof Curb — Sizes 030-050

NOTES:
1. ROOF CURB IS SHIPPED DISASSEMBLED.
2. ROOF CURB: 14 GA.[VA03-56] STL.
3. DIMENSIONS IN [ ] ARE MILLIMETERS.

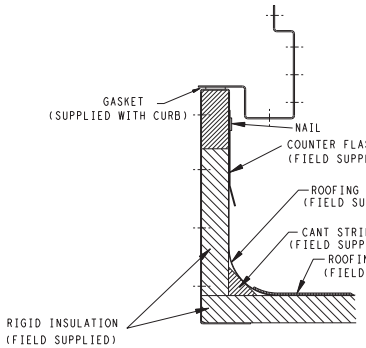

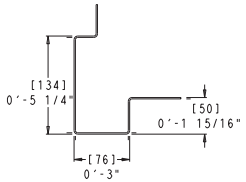

BASE RAIL CROSS SECTION
TYP ALL BASE RAILS

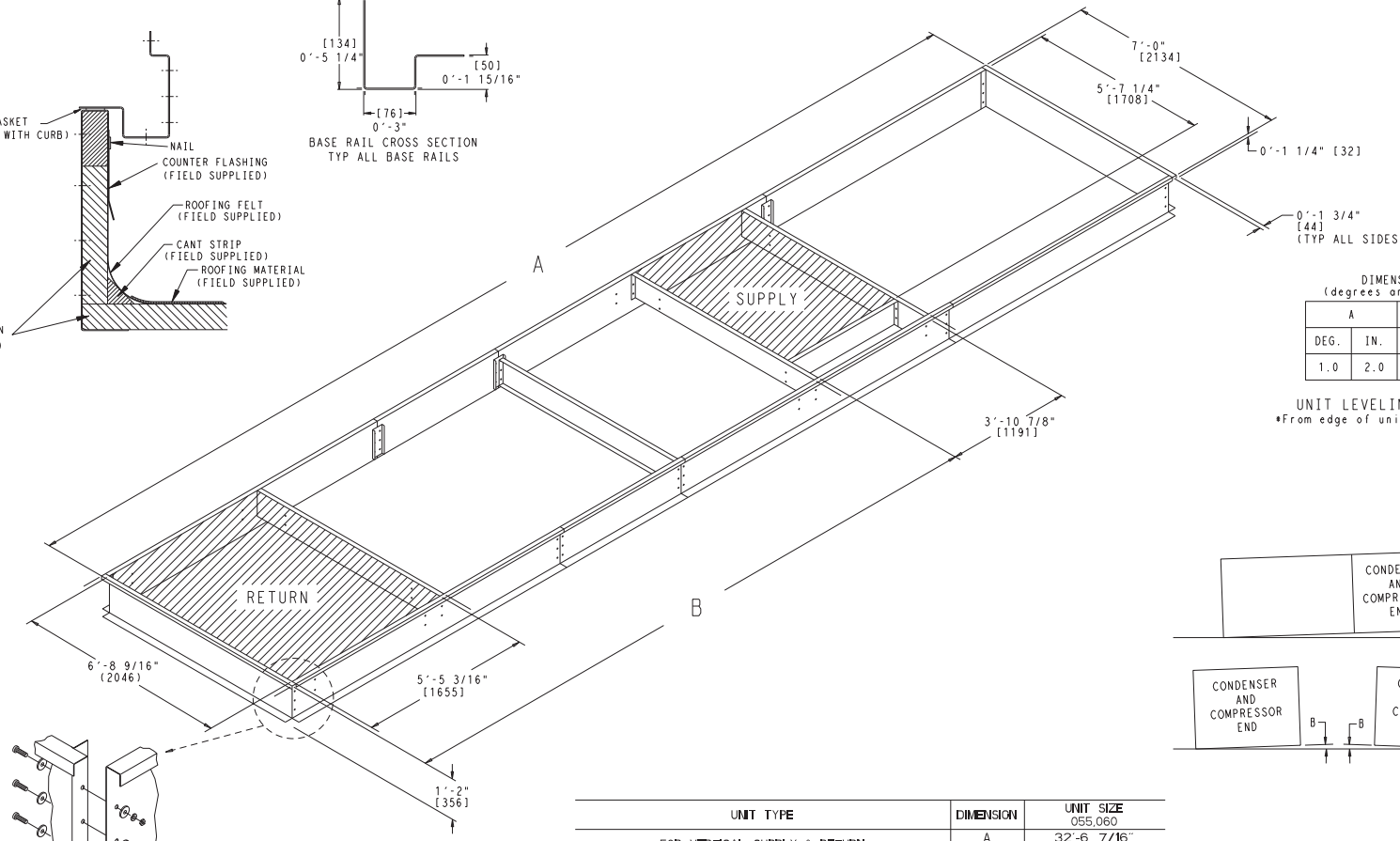

DIMENSIONS
(degrees and inches)

A		B	
DEG.	IN.	DEG.	IN.
1.0	2.0	.50	.75

UNIT LEVELING TOLERANCES
*From edge of unit to horizontal.

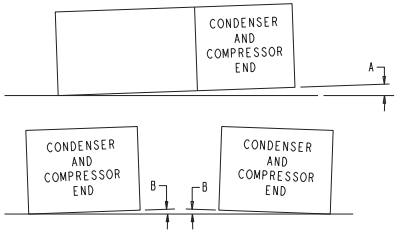

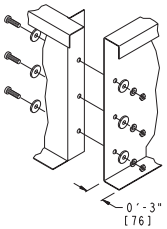

(CORNER CONNECTIONS AND
SPLICE PLATE CONNECTIONS)

UNIT TYPE	DIMENSION	UNIT SIZE 055,060
50P VERTICAL SUPPLY & RETURN	A B	32'-6 7/16" 19'-5 9/16"
50P VERTICAL SUPPLY & RETURN W/EXTENDED CHASSIS	A B	34'-7 5/8" 21'-6 3/4"
48/50P VERTICAL & HORIZONTAL SUPPLY & RETURN W/EXTENDED PLENUM	A B	35'-11 1/16" 22'-10 3/16"
48/50P VERTICAL & HORIZONTAL SUPPLY & RETURN W/EXTENDED CHASSIS & PLENUM	A B	38'-0 1/4" 24'-11 3/8"

Fig. 2 — Roof Curb — Sizes 055, 060

NOTES:
1. ROOF CURB ACCESSORY IS SHIPPED DISASSEMBLED.
2. ROOF CURB: 14 GA.[VA03-56] STL.
3. DIMENSIONS IN [ ] ARE MILLIMETERS.
4. SUGGESTED HOLE LOCATION FOR FIELD WIRING THROUGH ROOF CURB(HOLES TO BE SUPPLIED BY FIELD).

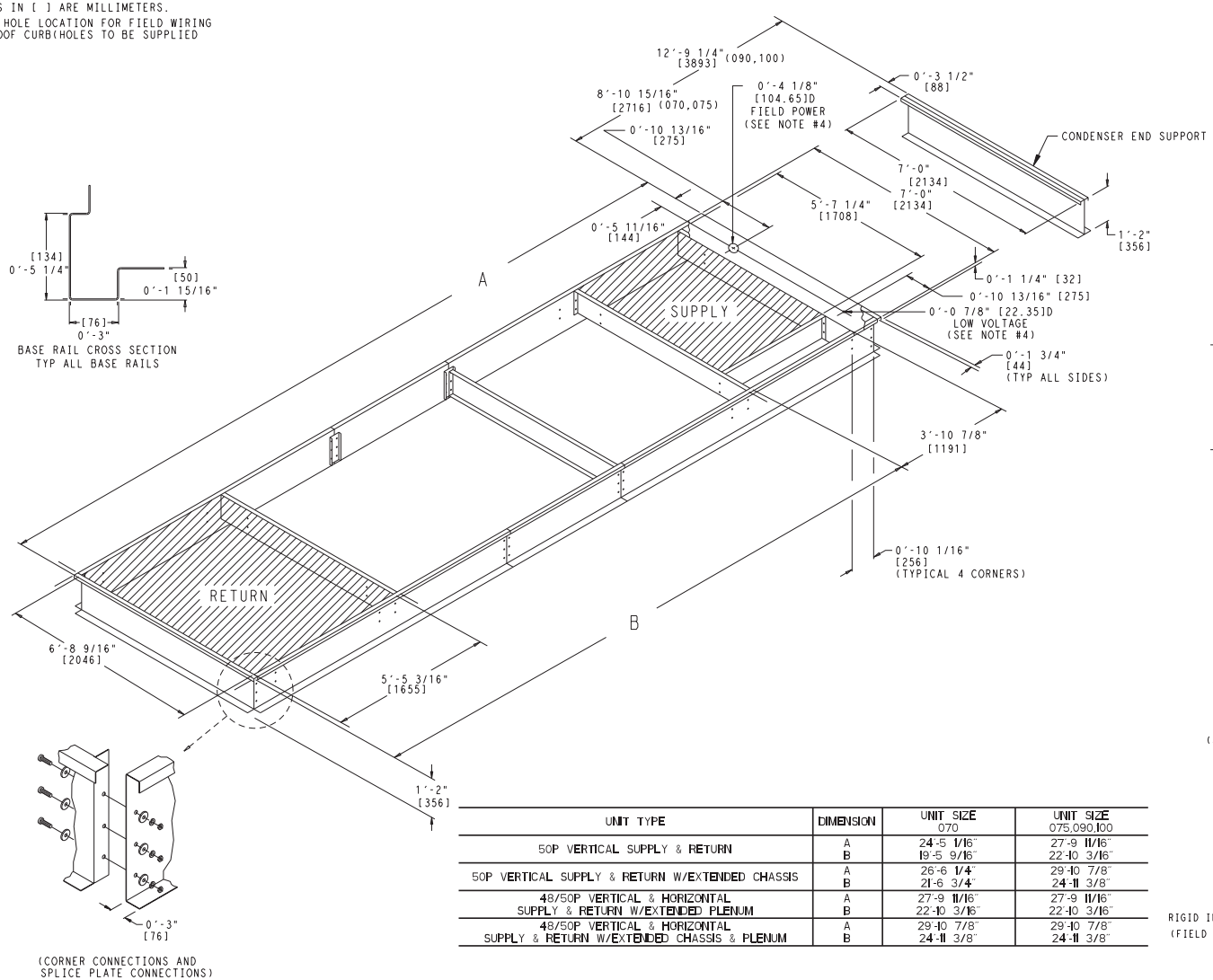

DIMENSIONS
(degrees and inches)

A		B	
DEG.	IN.	DEG.	IN.
1.0	2.0	.50	.75

UNIT LEVELING TOLERANCES
*From edge of unit to horizontal.

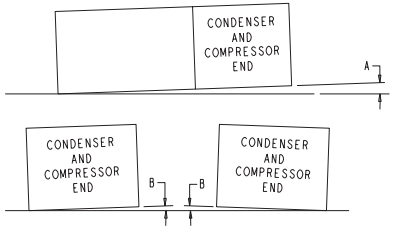

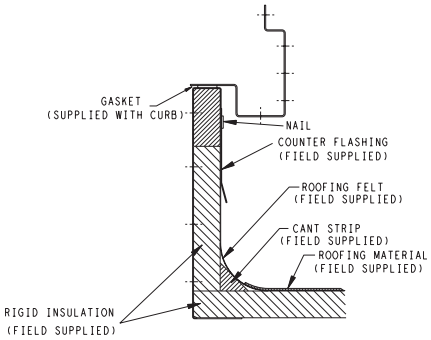

UNIT TYPE	DIMENSION	UNIT SIZE 070	UNIT SIZE 075,090,100
50P VERTICAL SUPPLY & RETURN	A	24'-5 1/16"	27'-9 11/16"
	B	19'-5 9/16"	22'-10 3/16"
50P VERTICAL SUPPLY & RETURN W/EXTENDED CHASSIS	A	26'-6 1/4"	29'-10 7/8"
	B	21'-6 3/4"	24'-11 3/8"
48/50P VERTICAL & HORIZONTAL SUPPLY & RETURN W/EXTENDED PLENUM	A	27'-9 11/16"	27'-9 11/16"
	B	22'-10 3/16"	22'-10 3/16"
48/50P VERTICAL & HORIZONTAL SUPPLY & RETURN W/EXTENDED CHASSIS & PLENUM	A	29'-10 7/8"	29'-10 7/8"
	B	24'-11 3/8"	24'-11 3/8"

Fig. 3 — Roof Curb — Sizes 070-100

NOTES:
1. ROOF CURB ACCESSORY CRRFCURB070A00 IS SHIPPED DISASSEMBLED.
2. DIMENSIONS IN [ ] ARE MILLIMETERS.
3. ROOF CURB: 14 GA.[VA03-56] STL.
   ROOF CURB PANS: 16 GA.[VA03-56] STL.

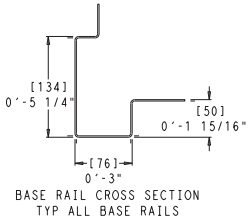

BASE RAIL CROSS SECTION
TYP ALL BASE RAILS

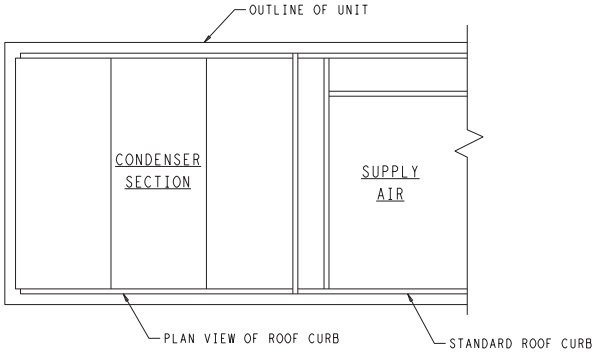

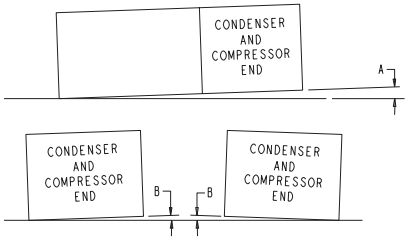

DIMENSIONS
(degrees and inches)

A		B	
DEG.	IN.	DEG.	IN.
1.0	2.0	.50	.75

UNIT LEVELING TOLERANCES
*From edge of unit to horizontal.

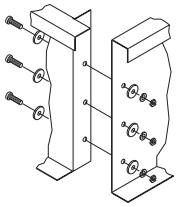

VIEW B
(CORNER CONNECTIONS AND
SPLICE PLATE CONNECTIONS)

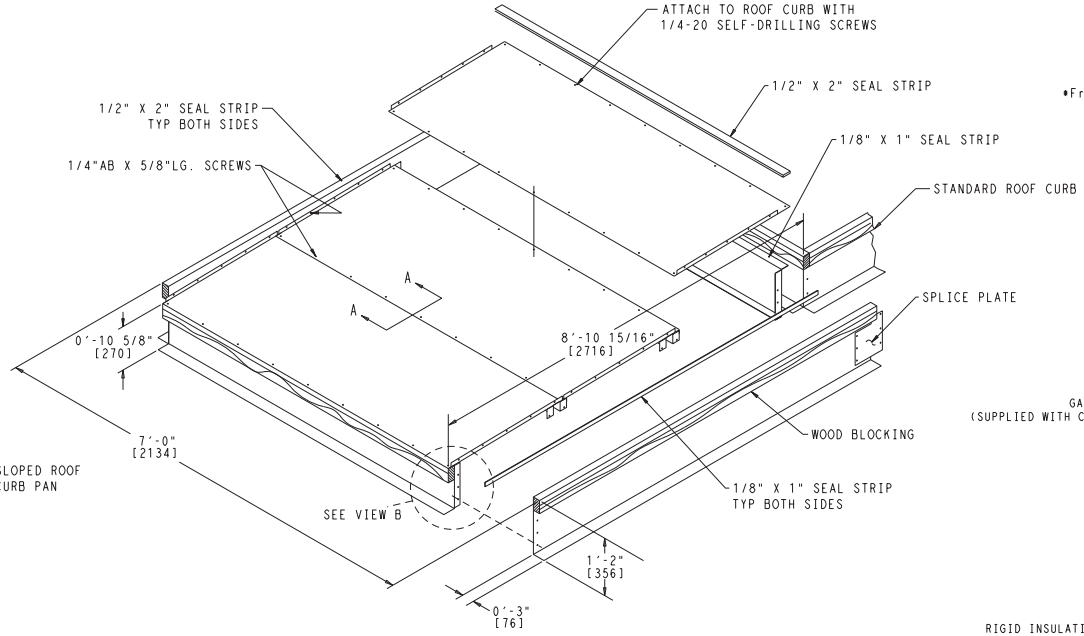

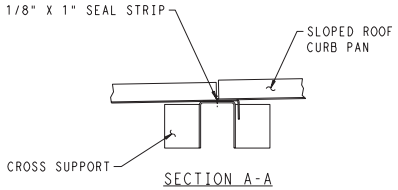

SECTION A-A
(TYPICAL 2 PLACES)

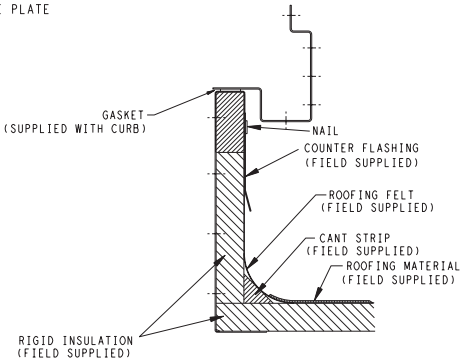

Fig. 4 — Condenser Section Roof Curb (Sizes 070 and 075)

NOTES:
1. ROOF CURB ACCESSORY CRRFCURB071A00 IS SHIPPED DISASSEMBLED.
2. DIMENSIONS IN [ ] ARE MILLIMETERS.
3. ROOF CURB: 14 GA.[VA03-56] STL.
   ROOF CURB PANS: 16 GA.[VA03-56] STL.

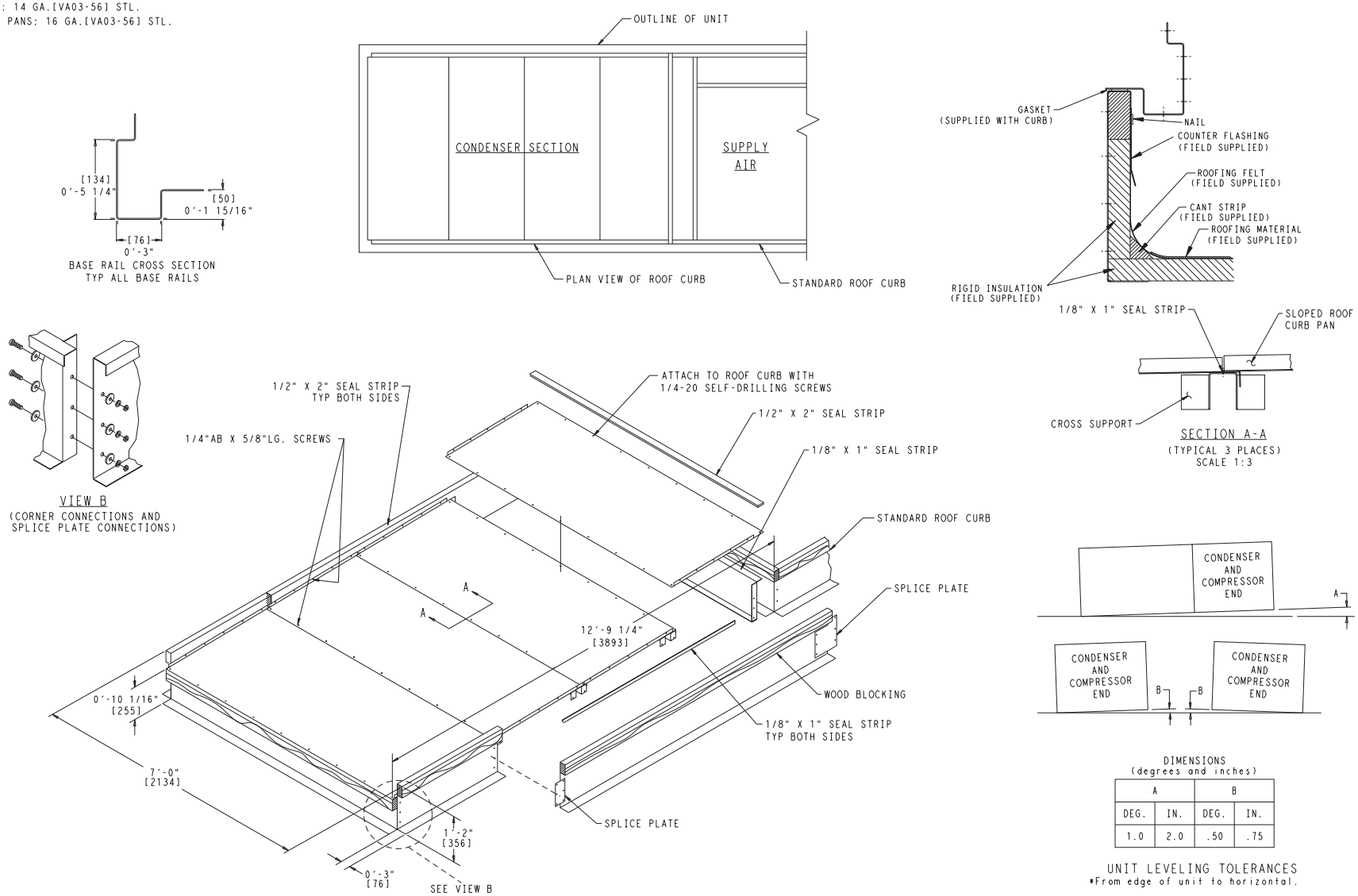

DIMENSIONS
(degrees and inches)

A		B	
DEG.	IN.	DEG.	IN.
1.0	2.0	.50	.75

UNIT LEVELING TOLERANCES
*From edge of unit to horizontal.

Fig. 5 — Condenser Section Roof Curb (Sizes 090 and 100)

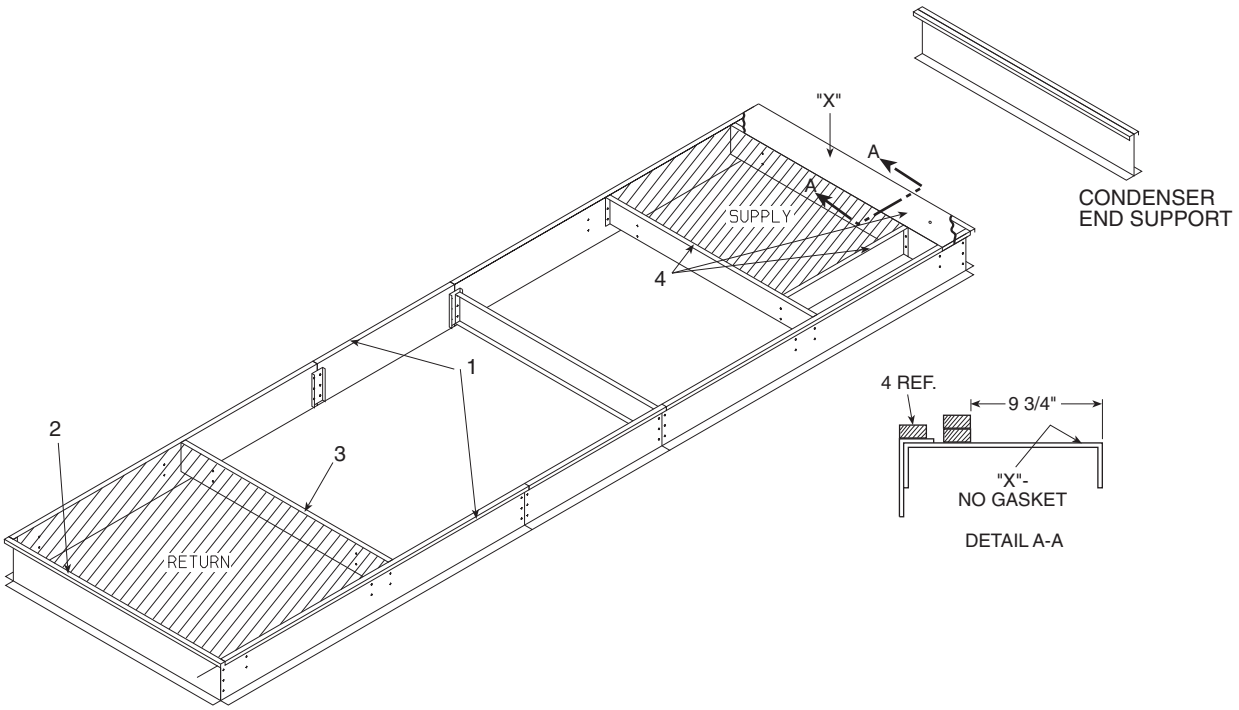

Fig. 6 — Gasket Location on Roof Curb (Size 070-100 Units)

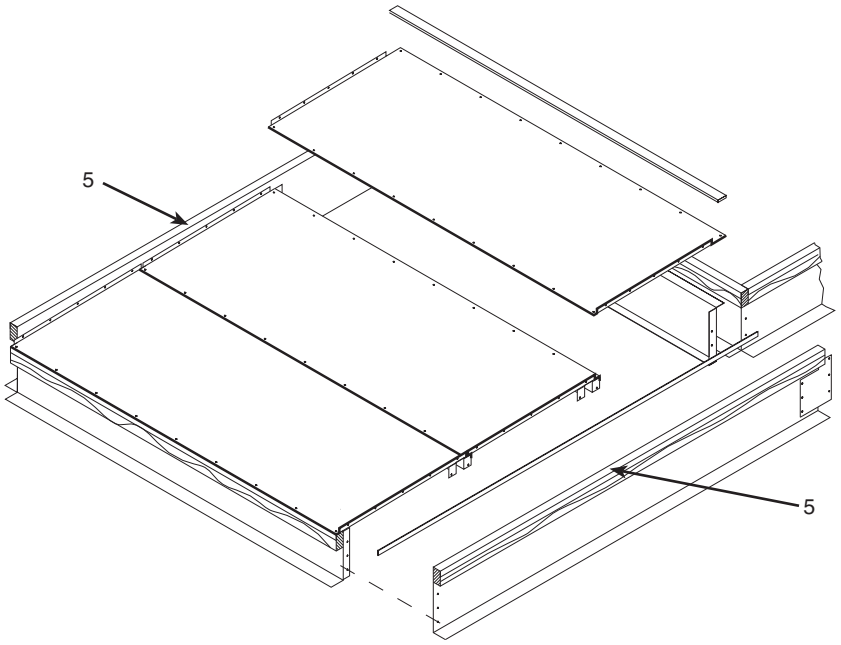

Fig. 7 — Gasket Location — Condenser Section Roof Curb (Size 070-100 Units)

Step 6 — Install Field-Fabricated Ductwork

⚠ WARNING

For vertical supply and return units, tools or parts could drop into ductwork and cause an injury. Install a 90-degree elbow in the supply and return ductwork between the unit and the conditioned space. If a 90-degree elbow cannot be installed, then a grille of sufficient strength and density should be installed to prevent objects from falling into the conditioned space. Failure to follow these instructions could result in personal injury or property damage due to falling objects.

The 48P2,P3 units are designed for vertical supply/return only. Field-fabricated ductwork must be attached to the roof curb, or to the support steel, prior to the final rigging and installation of the unit. Supply and return duct dimensions are shown in Fig. 1-3.

To attach ductwork to roof curb, insert duct approximately 10 to 11 in. up into roof curb. Connect ductwork to 14-gage roof curb material with sheet metal screws driven from inside the duct.

Secure all ducts to the building structure, using flexible duct connectors between roof curbs and ducts as required. Ducts passing through an unconditioned space must be insulated and covered with a vapor barrier. Outlet grilles must not lie directly below unit discharge.

Design supply duct strong enough to handle expected static pressures.

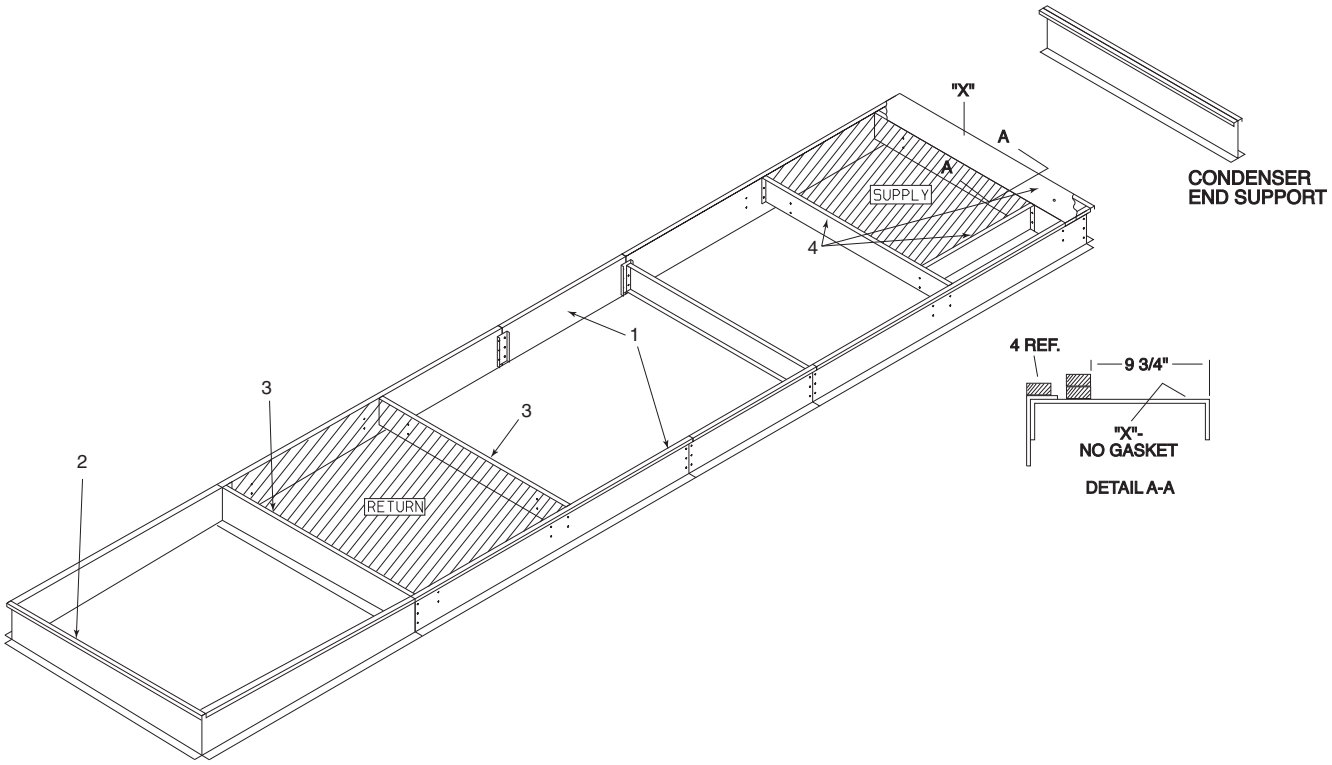

Fig. 8 — Gasket Location on Roof Curb (48P075-100 Units with Optional High-Capacity Power Exhaust)

Step 7 — Rig Unit — Do not drop unit; keep upright. Use spreader bars over unit to prevent sling or cable damage. Sheets of plywood placed along the condenser coils will provide additional protection. All lifting lugs MUST be used when lifting unit. Level by using unit frame as a reference. See Fig. 9 and 10 for information. Unit and accessory weights are shown in Tables 1-3 and 7. Weight distribution and center of gravity can be found in Fig. 11.

Step 8 — Connect Condensate Drain — There are a total of five drain connections required on each unit: one primary drain (on right-hand side of the unit) and four secondary drains (two on each side of unit).

PRIMARY DRAIN — The primary drain is a 2-in. FPT pipe connection located on the right-hand side of the unit looking at the unit from the return air end. See Fig. 12-21. Figure 22 shows the additional length of units with an extended chassis.

With field-supplied fittings and pipe sections, plumb the primary condensate drain to the 2-in. FPT connector on the base rail. Use a trap height of at least 4-in. for size 030-070 units and 7-in. for size 075-100 units. See Fig. 23 and 24. Apply a bead of RTV or similar sealant around the pipe joint at the connector in the base rail.

SECONDARY DRAINS (Units Installed on Curb) — There are two secondary drain connections on each side of the unit. See Fig. 25. There are secondary drains on each side of the unit in the filter section and on each side of the unit in the supply fan section. There are labels marking each location on the unit base rail. See Fig. 12-21.

Locate the four $1^1/_4$-in. drain coupling assemblies and mounting screws (shipped in a bag taped to the basepan in the supply fan section, located behind the access panel marked FAN SECTION). The drain couplings are a 10-gage plate with a $1^1/_4$ in. half coupling welded to the plate.

At each secondary drain hole location, there is a $1^3/_8$-in. hole pre-drilled in the bottom of the base rail, surrounded by four 0.20-in. engagement holes. Install a drain coupling assembly using screws provided at each secondary drain hole location. See Fig. 26. Do not attach any drain coupling assemblies in the condenser section base rail.

Using field-supplied fittings and pipe sections, assemble U-traps at each secondary drain fitting. See Fig. 27. Provide a minimum size of ½-in. pipe for secondary drains. Use a trap at least 4-in. deep for size 030-070 units and 7-in. deep for size 075-100 units. Apply a bead of RTV or similar sealant around the drain assemblies. See Fig. 26.

Consult local plumbing codes for direction on joining multiple drain lines. Total size of any combined line does not need to exceed nominal 2-in. size of primary drain connection.

Fill the U-traps at the secondary drain locations prior to unit start-up. Also check the U-traps before each cooling season to ensure the traps are filled and functioning properly.

SECONDARY DRAINS (Units Installed on Steel Beam or Slab) — There are two secondary drain connections required on each side of the unit. There are secondary drains on the bottom of the base rail on each side of the unit in the filter section and on each side of the unit in the supply fan section. There are labels marking each location on the unit base rail. See Fig. 12-21. Drain holes will need to be drilled in these locations at the side of the base rail. The existing secondary drain holes in the bottom of the base rail must be sealed. Prior to final positioning of the unit, apply a bead of RTV or similar sealant around each secondary drain hole in the bottom of the unit base rail. See Fig. 27. Install the metal seal plates then position the unit into final location.

Using field-supplied fittings and pipe sections, assemble U-traps at each secondary drain fitting. See Fig. 24. Provide a minimum size of ½-in. pipe for secondary drains. Use a trap at least 4-in. deep for size 030-070 units and 7-in. deep for size 075-100 units. Apply a bead of RTV or similar sealant around the drain assemblies. See Fig. 24.

⚠ CAUTION - NOTICE TO RIGGERS:

ALL PANELS MUST BE IN PLACE WHEN RIGGING.

NOTE: Rig with four cables and spread with two 95 inch (2413 MM) spreader bars.

MODEL POSITION			UNITS	SIZE	WEIGHT		CENTER OF GRAVITY				LIFTING LUGS	
							A		B		C	
1,2,3	4	5			LBS	KGS	IN	MM	IN	MM	IN	MM
48P	2,3,4,5	B,D,H	48 P2, P3, P4, P5 Vertical Supply/ Return Horizontal Supply/ Return Low Gas Heat	030	6019	2730	170.6	4334	45.8	1164	166.4	4227
				035	6169	2798	170.9	4342	45.8	1164	166.4	4227
				040	6710	3044	198.2	5035	45.8	1164	185.3	4707
				050	6925	3141	201.3	5113	45.8	1164	185.3	4707
				055	9220	4182	228.9	5814	45.8	1164	257.5	6541
				060	9275	4207	228.5	5803	45.8	1164	257.5	6541
				070	9615	4361	244.7	6215	40.2	1021	219.0	5563
				075	10665	4838	253.1	6429	40.2	1021	255.7	6495
				090	11265	5110	260.9	6628	41.5	1054	255.7	6495
				100	11285	5119	260.0	6603	41.5	1054	255.7	6495
48P	2,3,4,5	C,E,J	48 P2, P3, P4, P5 Vertical Supply/ Return Horizontal Supply/ Return High Gas Heat	030	6149	2789	169.7	4310	45.8	1164	166.4	4227
				035	6299	2857	170.0	4319	45.8	1164	166.4	4227
				040	6840	3103	197.3	5012	45.8	1164	185.3	4707
				050	7055	3200	200.4	5090	45.8	1164	185.3	4707
				055	9350	4241	229.0	5816	45.8	1164	257.5	6541
				060	9405	4266	228.5	5805	45.8	1164	257.5	6541
				070	9745	4420	244.8	6218	40.2	1021	219.0	5563
				075	10795	4897	254.4	6462	40.2	1021	255.7	6495
				090	11395	5169	262.1	6657	41.5	1054	255.7	6495
				100	11415	5178	261.3	6637	41.5	1054	255.7	6495
48P	2,3,4,5	P,R,W	48 P2, P3, P4, P5 Vertical Supply/ Return Horizontal Supply/ Return Low Gas Heat Extended Chassis	030	6519	2957	187.1	4753	45.8	1164	191.6	4867
				035	6669	3025	187.7	4768	45.8	1164	191.6	4867
				040	7210	3270	214.8	5456	45.8	1164	208.2	5288
				050	7425	3368	217.9	5534	45.8	1164	208.2	5288
				055	9770	4432	242.7	6164	45.8	1164	273.2	6939
				060	9825	4457	242.2	6151	45.8	1164	273.2	6939
				070	9825	4457	258.8	6575	40.2	1021	250.2	6355
				075	11215	5087	266.7	6775	40.2	1021	280.8	7132
				090	11815	5359	274.7	6976	41.5	1054	280.8	7132
				100	11835	5368	273.4	6944	41.5	1054	280.8	7132
48P	2,3,4,5	Q,S,X	48 P2, P3, P4, P5 Vertical Supply/ Return Horizontal Supply/ Return High Gas Heat Extended Chassis	030	6649	3016	186.1	4726	45.8	1164	191.6	4867
				035	6799	3084	186.7	4742	45.8	1164	191.6	4867
				040	7340	3329	213.8	5431	45.8	1164	208.2	5288
				050	7555	3427	216.8	5507	45.8	1164	208.2	5288
				055	9900	4491	242.7	6166	45.8	1164	273.2	6939
				060	9955	4516	242.3	6153	45.8	1164	273.2	6939
				070	10295	4670	258.4	6564	40.2	1021	250.2	6355
				075	11345	5146	268.0	6808	40.2	1021	280.8	7132
				090	11945	5418	275.8	7005	41.5	1054	280.8	7132
				100	11965	5427	274.7	6978	41.5	1054	280.8	7132
50P	2,3	-,A,B,C	50 P2, P3 Vertical Supply/ Return	030	5519	2503	159.2	4043	45.8	1164	148.1	3762
				035	5669	2571	159.4	4049	45.8	1164	148.1	3762
				040	6210	2817	186.1	4727	45.8	1164	169.5	4305
				050	6425	2914	189.3	4807	45.8	1164	169.5	4305
				055	8230	3733	212.6	5401	45.8	1164	210.5	5347
				060	8285	3758	212.3	5392	45.8	1164	210.5	5347
				070	8625	3912	250.5	6362	40.2	1021	176.5	4483
50P	2,3,4,5	-,B,C	50 P2, P3, P4, P5 Vertical Supply/ Return Horizontal Supply/ Return	075	10265	4656	250.1	6354	40.2	1021	255.7	6495
				090	10865	4928	258.4	6562	41.5	1054	255.7	6495
				100	10885	4937	257.3	6535	41.5	1054	255.7	6495
50P	2,3	H	50 P2, P3 Vert Supply/ Return w/ Ext Plenum	030	5819	2639	152.3	3867	45.8	1164	166.4	4227
	4,5	-		035	5969	2708	152.1	3863	45.8	1164	166.4	4227
				040	6510	2953	180.2	4576	45.8	1164	185.3	4707
			50 P4, P5 Horizontal Supply/ Return	050	6725	3050	183.6	4665	45.8	1164	185.3	4707
				055	8780	3983	231.7	5885	45.8	1164	257.5	6541
				060	8835	4008	231.3	5874	45.8	1164	257.5	6541
				070	9175	4162	247.5	6287	40.2	1021	219.0	5563
50P	2,3	R,S,T,V,W	50 P2, P3 Vertical Supply/ Return w/ Extended Chassis	030	6019	2730	175.4	4456	45.8	1164	173.3	4402
				035	6169	2798	176.2	4475	45.8	1164	173.3	4402
				040	6710	3044	202.8	5151	45.8	1164	194.7	4945
				050	6925	3141	205.8	5228	45.8	1164	194.7	4945
				055	8780	3983	226.0	5741	45.8	1164	208.2	5288
				060	8835	4008	225.6	5731	45.8	1164	208.2	5288
				070	9175	4162	264.8	6725	40.2	1021	201.7	5123
50P	2,3,4,5	R,T,V,W	50 P2, P3, P4, P5 Vert, Horz Supply/ Return w/ Extended Chassis	075	10815	4906	264.6	6722	40.2	1021	280.8	7132
				090	11415	5178	272.9	6932	41.5	1054	280.8	7132
				100	11435	5187	271.6	6899	41.5	1054	280.8	7132
50P	2,3	P,Y	50 P2, P3 Vert Supply/ Return w/ Ext Plenum w/ Extended Chassis	030	6319	2866	166.8	4237	45.8	1164	191.6	4867
	4,5	R,W		035	6469	2934	167.1	4244	45.8	1164	191.6	4867
				040	7010	3180	195.3	4961	45.8	1164	208.2	5288
			50 P4, P5 Horizontal Supply/ Return w/ Extended Chassis	050	7225	3277	198.8	5050	45.8	1164	208.2	5288
				055	9330	4232	245.1	6226	45.8	1164	273.2	6939
				060	9385	4257	244.7	6214	45.8	1164	273.2	6939
				070	9725	4411	260.8	6625	45.8	1164	250.2	6355

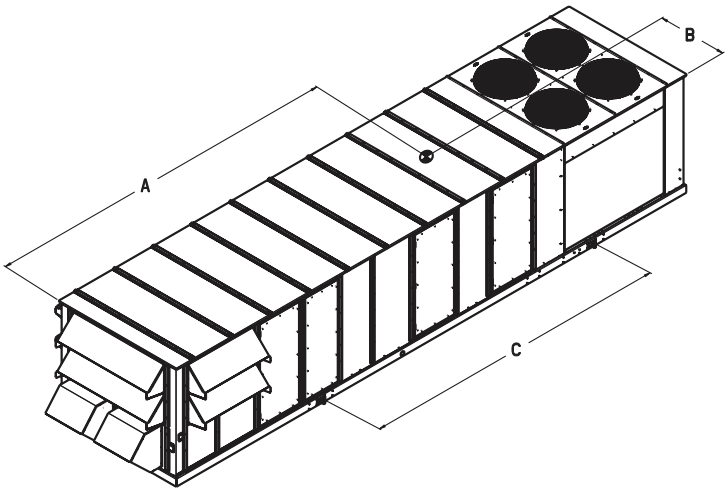

NOTE:
1. **Weights do not include economizer or power exhaust.**

48ZZ501077 2.0

Fig. 9 — Rigging Label — Units without Optional Return Fan or High-Capacity Power Exhaust

⚠ CAUTION - NOTICE TO RIGGERS:

ALL PANELS MUST BE IN PLACE WHEN RIGGING.

NOTE: Rig with four cables and spread with two 95 inch (2413 MM) spreader bars.

MODEL POSITION			UNITS	SIZE	WEIGHT		CENTER OF GRAVITY				LIFTING LUGS	
							A		B		C	
1,2,3	4	5			LBS	KGS	IN	MM	IN	MM	IN	MM
50P	2,3,4,5	-,B,C	50 P2, P3, P4, P5	075	11921	5407	220.1	5590	40.2	1021	255.7	6495
			Vert Supply/Return w/ RE Fan	090	12521	5679	228.4	5800	41.5	1054	255.7	6495
			Horz Supply Vert Return w/ RE Fan	100	12541	5689	227.8	5786	41.5	1054	255.7	6495
48P	2,3,4,5	B,D,H	48 P2, P3, P4, P5 Low Gas Heat	075	12321	5589	224.6	5706	40.2	1021	255.7	6495
			Vert Supply/Return w/ RE Fan	090	12921	5861	232.6	5908	41.5	1054	255.7	6495
			Horz Supply Vert Return w/ RE Fan	100	12941	5870	230.4	5853	41.5	1054	255.7	6495
48P	2,3,4,5	C,E,J	48 P2, P3, P4, P5 High Gas Heat	075	12451	5648	226.9	5764	40.2	1021	255.7	6495
			Vert Supply/Return w/ RE Fan	090	13051	5920	233.7	5936	41.5	1054	255.7	6495
			Horz Supply Vert Return w/ RE Fan	100	13071	5929	232.9	5915	41.5	1054	255.7	6495
50P	2,3,4,5	R,T,V,W	50 P2, P3, P4, P5	075	12471	5657	231.7	5885	40.2	1021	280.8	7132
			Vert Sup/Ret, Horz Sup/ Vert Ret	090	13071	5929	240.1	6098	41.5	1054	280.8	7132
			w/ RE Fan, w/ Ext Chassis	100	13091	5938	239.2	6075	41.5	1054	280.8	7132
48P	2,3,4,5	P,R,W	48 P2, P3, P4, P5 Low Gas Heat	075	12871	5838	236.2	6000	40.2	1021	280.8	7132
			Vert Sup/Ret, Horz Sup/ Vert Ret	090	13471	6110	244.3	6205	41.5	1054	280.8	7132
			w/ RE Fan, w/ Ext Chassis	100	13491	6119	241.8	6142	41.5	1054	280.8	7132
48P	2,3,4,5	Q,S,X	48 P2, P3, P4, P5 High Gas Heat	075	13001	5897	238.5	6058	40.2	1021	280.8	7132
			Vert Sup/Ret, Horz Sup/ Vert Ret	090	13601	6169	245.4	6234	41.5	1054	280.8	7132
			w/ RE Fan, w/ Ext Chassis	100	13621	6178	244.2	6203	41.5	1054	280.8	7132
48P	2,3,4,5	B,D,H	48 P2, P3, P4, P5 Low Gas Heat	075	13499	6123	290.1	7367	40.2	1021	312.1	7927
			Vert Sup/Ret, Horz Sup/Ret	090	14097	6394	297.7	7561	41.5	1054	312.1	7927
			w/ Hi Cap PE	100	14119	6404	297.1	7546	41.5	1054	312.1	7927
48P	2,3,4,5	C,E,J	48 P2, P3, P4, P5 High Gas Heat	075	13629	6182	291.3	7400	40.2	1021	312.1	7927
			Vert Sup/Ret, Horz Sup/Ret	090	14227	6453	298.9	7593	41.5	1054	312.1	7927
			w/ Hi Cap PE	100	14249	6463	298.2	7575	41.5	1054	312.1	7927
50P	2,3,4,5	-,B,C	50 P2, P3, P4, P5	075	13099	5942	287.1	7293	40.2	1021	312.1	7927
			Vert Sup/Ret, Horz Sup/Ret	090	13697	6213	295.1	7496	41.5	1054	312.1	7927
			w/ Hi Cap PE	100	13719	6223	294.4	7478	41.5	1054	312.1	7927
48P	2,3,4,5	R,T,V,W	48 P2, P3, P4, P5 Low Gas Heat	075	14049	6373	483.5	12280	40.2	1021	337.3	8567
			Vert Sup/Ret, Horz Sup/Ret	090	14647	6644	484.3	12302	41.5	1054	337.3	8567
			w/ Hi Cap PE w/ Ext Chassis	100	14669	6654	493.8	12542	41.5	1054	337.3	8567
48P	2,3,4,5	P,R,W	48 P2, P3, P4, P5 High Gas Heat	075	14179	6432	483.5	12280	40.2	1021	337.3	8567
			Vert Sup/Ret, Horz Sup/Ret	090	14777	6703	484.3	12301	41.5	1054	337.3	8567
			w/ Hi Cap PE w/ Ext Chassis	100	14799	6713	493.8	12542	41.5	1054	337.3	8567
50P	2,3,4,5	Q,S,X	50 P2, P3, P4, P5	075	13649	6191	483.5	12281	40.2	1021	337.3	8567
			Vert Sup/Ret, Horz Sup/Ret	090	14247	6462	484.4	12304	41.5	1054	337.3	8567
			w/ Hi Cap PE w/ Ext Chassis	100	14269	6472	493.8	12543	41.5	1054	337.3	8567

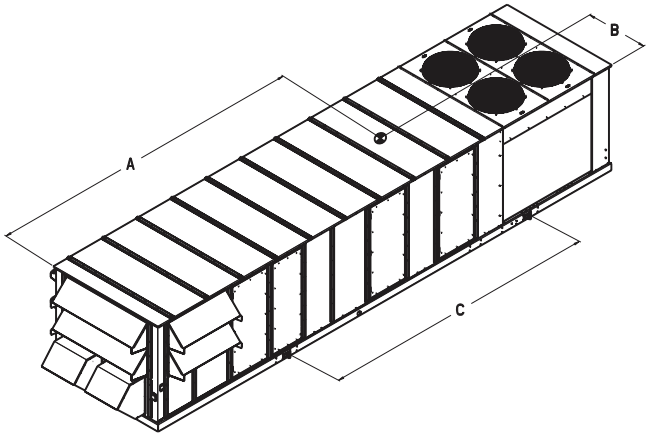

48ZZ501078 2.0

Fig. 10 — Rigging Label — Units with Optional Return Fan or High-Capacity Power Exhaust

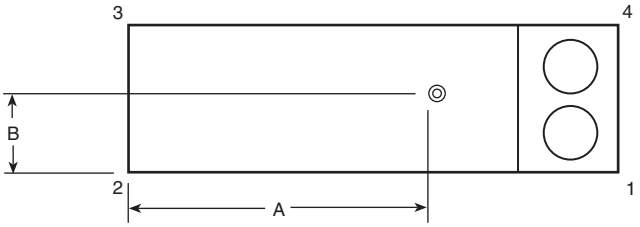

48P2,P3,P4,P5 UNITS	SIZE	CORNER WEIGHTS (lb)				TOTAL (lb)	A	B
		1	2	3	4		in.	in.
Vertical Supply/Return	030	2002	1009	1008	2000	6,019	170 5/8	45 7/8
Horizontal Supply/Return	035	2056	1031	1029	2053	6,169	170 7/8	45 7/8
Low Heat	040	1983	1374	1372	1981	6,710	198 1/4	45 7/8
No Extended Chassis	050	2079	1386	1384	2076	6,925	201 1/4	45 7/8
	055	2408	2205	2202	2404	9,220	228 7/8	45 7/8
	060	2417	2223	2220	2414	9,275	228 1/2	45 7/8
	070	2950	2450	1913	2303	9,615	244 5/8	40 1/4
	075	3385	2604	2033	2643	10,665	253 1/8	40 1/4
	090	3255	2911	2407	2691	11,265	261	41 1/2
	100	3248	2929	2422	2686	11,285	260	41 1/2
Vertical Supply/Return	030	2034	1042	1041	2032	6,149	169 3/4	45 7/8
Horizontal Supply/Return	035	2088	1064	1062	2085	6,299	170	45 7/8
High Heat	040	2013	1410	1408	2010	6,840	197 3/8	45 7/8
No Extended Chassis	050	2108	1422	1420	2105	7,055	200 3/8	45 7/8
	055	2443	2236	2233	2439	9,350	229	45 7/8
	060	2452	2254	2250	2449	9,405	228 1/2	45 7/8
	070	2991	2481	1937	2335	9,745	244 3/4	40 1/4
	075	3444	2618	2044	2689	10,795	254 3/8	40 1/4
	090	3307	2931	2424	2734	11,395	262 1/8	41 1/2
	100	3303	2946	2436	2731	11,415	261 1/4	41 1/2
Vertical Supply/Return	030	2166	1096	1094	2163	6,519	187 1/8	45 7/8
Horizontal Supply/Return	035	2223	1114	1112	2220	6,669	187 3/4	45 7/8
Low Heat	040	2148	1460	1458	2145	7,210	214 3/4	45 7/8
with Extended Chassis	050	2244	1471	1469	2241	7,425	217 7/8	45 7/8
	055	2558	2331	2328	2554	9,770	242 5/8	45 7/8
	060	2567	2349	2346	2563	9,825	242 1/8	45 7/8
	070	3117	2541	2023	2434	10,165	258 7/8	40 1/4
	075	3551	2747	2145	2773	11,215	266 3/4	40 1/4
	090	3419	3048	2521	2827	11,815	274 5/8	41 1/2
	100	3409	3070	2538	2819	11,835	273 3/8	41 1/2
Vertical Supply/Return	030	2197	1130	1129	2194	6,649	186 1/8	45 7/8
Horizontal Supply/Return	035	2253	1148	1147	2250	6,799	186 5/8	45 7/8
High Heat	040	2177	1496	1494	2174	7,340	213 3/4	45 7/8
with Extended Chassis	050	2272	1508	1506	2269	7,555	216 7/8	45 7/8
	055	2592	2361	2358	2589	9,900	242 3/4	45 7/8
	060	2602	2379	2376	2598	9,955	242 1/4	45 7/8
	070	3158	2623	2048	2466	10,295	258 1/2	40 1/4
	075	3610	2761	2156	2818	11,345	268	40 1/4
	090	3471	3068	2537	2870	11,945	275 3/4	41 1/2
	100	3463	3086	2552	2864	11,965	274 3/4	41 1/2

48P2,P3,P4,P5 UNITS WITH OPTIONAL HIGH-CAPACITY POWER EXHAUST	SIZE	CORNER WEIGHTS (lb)				TOTAL (lb)	A	B
		1	2	3	4		in.	in.
Vertical Supply/Return	075	4171	3410	2662	3256	13,499	290	40 1/4
Horizontal Supply/Return	090	4004	3712	3070	3311	14,097	297 5/8	41 1/2
Low Heat	100	4002	3726	3081	3309	14,119	297 1/8	41 1/2
Vertical Supply/Return	075	4230	3424	2673	3302	13,629	291 3/8	40 1/4
Horizontal Supply/Return	090	4058	3730	3084	3356	14,227	299	41 1/2
High Heat	100	4054	3745	3097	3352	14,249	298 1/4	41 1/2
Vertical Supply/Return	075	6905	984	768	5391	14,049	483 1/2	40 1/4
Horizontal Supply/Return	090	6484	1534	1268	5362	14,647	484 3/8	41 1/2
Low Heat with Extended Chassis	100	6620	1409	1165	5474	14,669	493 3/4	41 1/2
Vertical Supply/Return	075	6969	993	776	5441	14,179	483 1/2	40 1/4
Horizontal Supply/Return	090	6541	1547	1280	5409	14,777	484 1/4	41 1/2
High Heat with Extended Chassis	100	6679	1422	1176	5523	14,799	493 3/4	41 1/2

NOTE: The weight distribution and center of gravity information include the impact of an economizer, the largest indoor fan motor, and a VFD (variable frequency drive). On units with a return fan or high-capacity power exhaust, the largest motors and VFD are also included. These weights do not include the impact of other factory-installed options such as barometric relief, power exhaust, high-capacity indoor coil, hot water coil, or indoor fan.

Fig. 11 — Weight Distribution and Center of Gravity

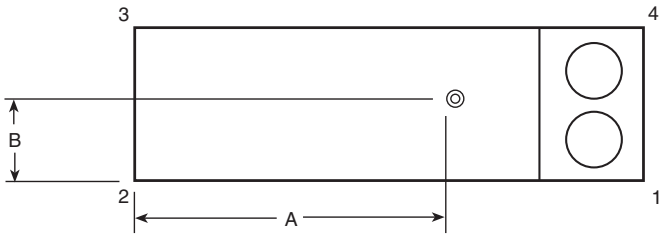

48P2,P3,P4,P5 UNITS WITH OPTIONAL RETURN FAN	SIZE	CORNER WEIGHTS (lb)				TOTAL (lb)	A	B
		1	2	3	4		in.	in.
Vertical Supply/Return	075	3470	3449	2693	2709	12,321	224 5/8	40 1/4
Horizontal Supply/Return	090	3327	3745	3097	2751	12,921	232 5/8	41 1/2
Low Heat	100	3302	3782	3127	2730	12,941	230 3/8	41 1/2
Vertical Supply/Return	075	3543	3449	2693	2766	12,451	226 7/8	40 1/4
Horizontal Supply/Return	090	3377	3767	3115	2793	13,051	233 3/4	41 1/2
High Heat	100	3370	3785	3130	2787	13,071	232 7/8	41 1/2
Vertical Supply/Return	075	3609	3618	2825	2818	12,871	236 1/4	40 1/4
Horizontal Supply/Return	090	3467	3906	3230	2867	13,471	244 1/4	41 1/2
Low Heat with Extended Chassis	100	3437	3948	3264	2842	13,491	241 3/4	41 1/2
Vertical Supply/Return	075	3681	3620	2826	2874	13,001	238 1/2	40 1/4
Horizontal Supply/Return	090	3517	3928	3248	2908	13,601	245 3/8	41 1/2
High Heat with Extended Chassis	100	3505	3951	3267	2898	13,621	244 1/4	41 1/2

NOTE: The weight distribution and center of gravity information include the impact of an economizer, the largest indoor fan motor, and a VFD (variable frequency drive). On units with a return fan or high-capacity power exhaust, the largest motors and VFD are also included. These weights do not include the impact of other factory-installed options such as barometric relief, power exhaust, high-capacity indoor coil, hot water coil, or indoor fan.

Fig. 11 — Weight Distribution and Center of Gravity (cont)

Locate the four 1 1/4-in. drain coupling assemblies and mounting screws (shipped in a bag taped to the basepan in the supply fan section, located behind the access panel marked FAN SECTION). The drain couplings are a 10-gage plate with a 1 1/4 in. half coupling welded to the plate.

After final positioning of the unit, perform the following procedure:

1. At each of the four secondary drain locations (marked with labels on the unit base rail), position the drain coupling assembly in the side of the base rail. Mark the screw holes and the drain hole locations on the base rail.
2. Drill holes for drain outlet (use 1 3/8-in. hole saw) and for the mounting screws (use 3/16-in. drill bit).
3. Install a drain coupling assembly using screws provided at each secondary drain hole location.
4. Using field-supplied fittings and pipe sections, assemble U-traps at each secondary drain fitting. See Fig. 24. Provide minimum size of ½-in. pipe for secondary drains. Use a trap at least 4-in. deep for size 030-070 units and 7-in. deep for size 075-100 units.
5. Apply a bead of RTV or similar sealant around the drain assemblies.

Consult local plumbing codes for direction on joining multiple drain lines. Total size of any combined line does not need to exceed nominal 2-in. size of primary drain connection.

Fill the U-traps at the secondary drain locations prior to unit start-up. Also check the U-traps before each cooling season to ensure the traps are filled and functioning properly.

NOTES:

1. DIMENSIONS IN [ ] ARE IN MILLIMETERS.
2. ⊕ UNIT WEIGHT AND CENTER OF GRAVITY INCLUDES ECONOMIZER, LARGEST INDOOR FAN MOTOR AND HIGH CAPACITY EVAPORATOR COIL.
3. UNIT CLEARANCES
   TOP - DO NOT RESTRICT CONDENSER FANS
   CONTROL BOX END - 6′-0"
   SIDES - 6′-0"
   ECONOMIZER END - 6′-0"(EXCEPT POWER EXHAUST UNITS 10′-0")
   FOR SMALLER SERVICE AND OPERATIONAL CLEARANCES, CONTACT CARRIER APPLICATION ENGINEERING DEPARTMENT.′
4. DOWNSHOT DUCTS DESIGNED TO BE ATTACHED TO ACCESSORY ROOF CURB. IF UNIT IS MOUNTED ON DUNNAGE,IT IS RECOMMENDED THE DUCTS BE SUPPORTED BY CROSS BRACES AS DONE ON THE ACCESSORY ROOF CURB.
5. WHEN THE UNIT IS SLAB MOUNTED, PLUG THE FACTORY DRILLED AUXILIARY CONDENSATE DRAIN HOLES.
6. ECONOMIZER SIDE HOODS ARE FOLDED INSIDE UNIT FOR SHIPPING.

UNIT SIZE	WEIGHT		A		B	
	LBS.	KGS.	MM	FT. IN.	MM	FT.IN.
030 LOW HEAT	6019	2730	4334	14′-2 5/8"	1164	3′-9 13/16"
030 HIGH HEAT	6149	2789	4310	14′-1 11/16"	1164	3′-9 13/16"
035 LOW HEAT	6169	2798	4342	14′-2 15/16"	1164	3′-9 13/16"
035 HIGH HEAT	6299	2857	4319	14′-2"	1164	3′-9 13/16"

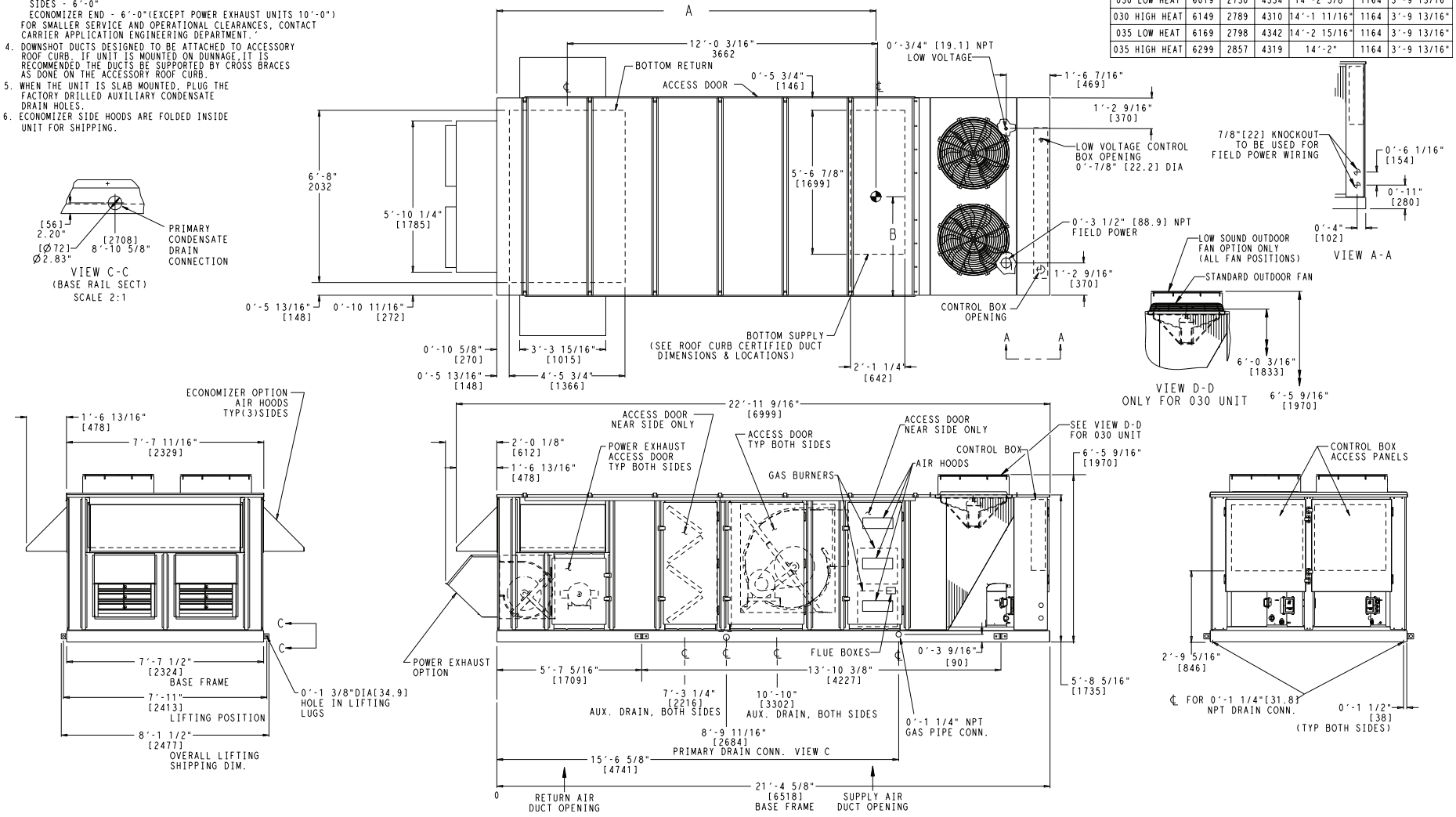

Fig. 12 — Base Unit Dimensional Drawing — 48P2,P3030,035 (Standard Chassis Unit Shown)

NOTES:
1. DIMENSIONS IN [ ] ARE IN MILLIMETERS.
2. UNIT WEIGHT AND CENTER OF GRAVITY INCLUDES ECONOMIZER, LARGEST INDOOR FAN MOTOR AND HIGH CAPACITY EVAPORATOR COIL.
3. UNIT CLEARANCES
   TOP - DO NOT RESTRICT CONDENSER FANS
   CONTROL BOX END - 6′-0″
   SIDES - 6′-0″
   ECONOMIZER END - 6′-0″(EXCEPT POWER EXHAUST UNITS 10′-0″)
   FOR SMALLER SERVICE AND OPERATIONAL CLEARANCES, CONTACT CARRIER APPLICATION ENGINEERING DEPARTMENT.
4. SUGGESTED FIELD CONNECTIONS TO BE MADE INSIDE OR OUTSIDE OF 32.5 mm FLANGE.
5. WHEN THE UNIT IS SLAB MOUNTED, PLUG THE FACTORY DRILLED AUXILIARY CONDENSATE DRAIN HOLES.
6. ECONOMIZER SIDE HOODS ARE FOLDED INSIDE UNIT FOR SHIPPING.

UNIT SIZE	WEIGHT		A		B	
	LBS.	KGS.	MM	FT. IN.	MM	FT.IN.
030 LOW HEAT	6019	2730	4334	14′-2 5/8″	1164	3′-9 13/16″
030 HIGH HEAT	6149	2789	4310	14′-1 11/16″	1164	3′-9 13/16″
035 LOW HEAT	6169	2798	4342	14′-2 15/16″	1164	3′-9 13/16″
035 HIGH HEAT	6299	2857	4319	14′-2″	1164	3′-9 13/16″

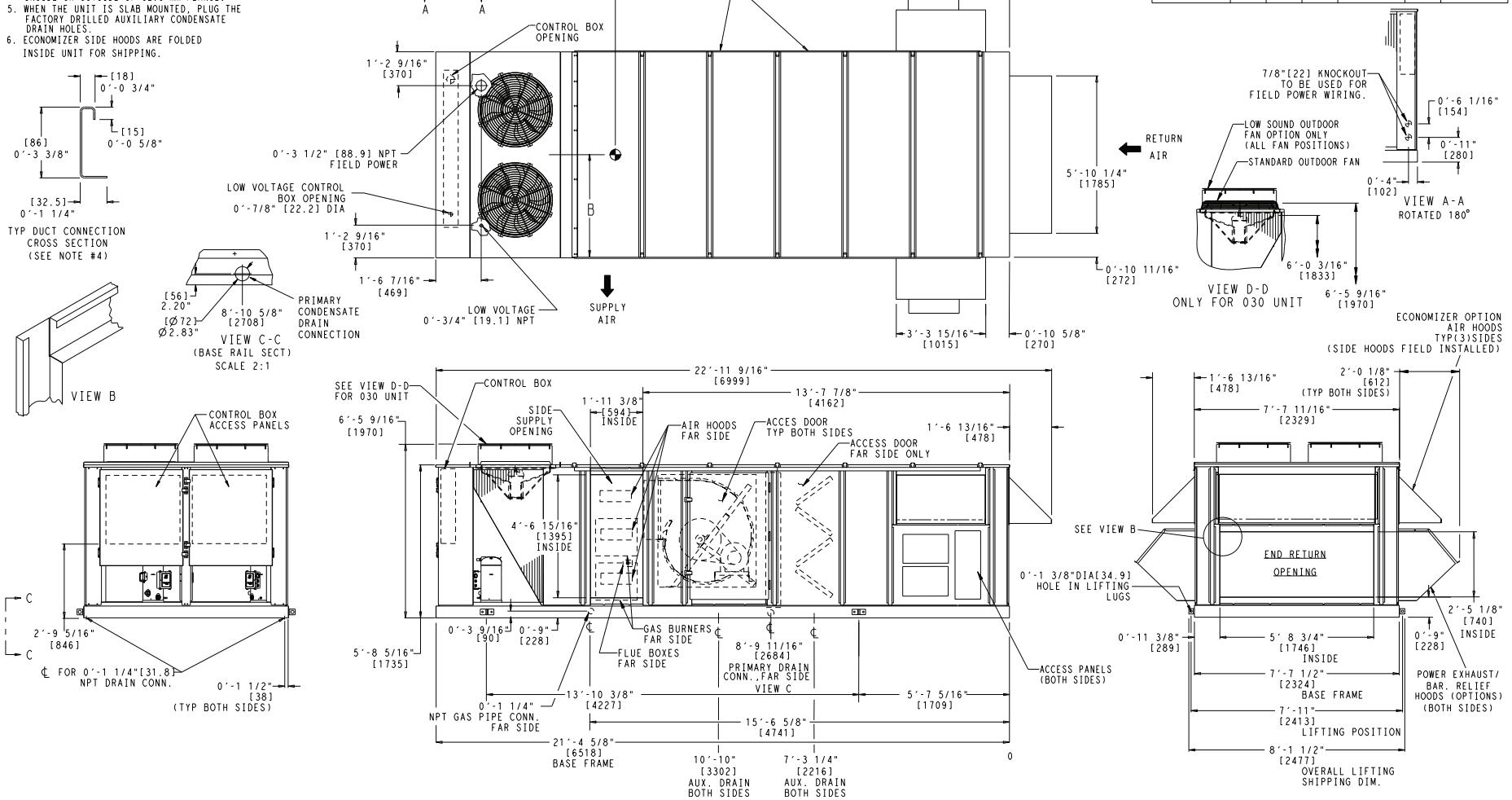

Fig. 13 — Base Unit Dimensional Drawing — 48P4,P5030,035 (Standard Chassis Unit Shown)

NOTES:
1. DIMENSIONS IN [ ] ARE IN MILLIMETERS.
2. ⊕ UNIT WEIGHT AND CENTER OF GRAVITY INCLUDES ECONOMIZER, LARGEST INDOOR FAN MOTOR AND HIGH CAPACITY EVAPORATOR COIL.
3. UNIT CLEARANCES
   TOP - DO NOT RESTRICT CONDENSER FANS
   CONTROL BOX END - 6′-0″
   SIDES - 6′-0″
   ECONOMIZER END - 6′-0″(EXCEPT POWER EXHAUST UNITS 10′-0″)
   FOR SMALLER SERVICE AND OPERATIONAL CLEARANCES, CONTACT CARRIER APPLICATION ENGINEERING DEPARTMENT.
4. DOWNSHOT DUCTS DESIGNED TO BE ATTACHED TO ACCESSORY ROOF CURB. IF UNIT IS MOUNTED ON DUNNAGE,IT IS RECOMMENDED THE DUCTS BE SUPPORTED BY CROSS BRACES AS DONE ON THE ACCESSORY ROOF CURB.
5. WHEN THE UNIT IS SLAB MOUNTED, PLUG THE FACTORY DRILLED AUXILIARY CONDENSATE DRAIN HOLES.
6. ECONOMIZER SIDE HOODS ARE FOLDED INSIDE UNIT FOR SHIPPING.

UNIT SIZE	WEIGHT LBS.	WEIGHT KGS.	A MM	A FT. IN.
040 LOW HEAT	6710	3044	5035	16′-6 1/4″
040 HIGH HEAT	6840	3103	5012	16′-5 3/8″
050 LOW HEAT	6925	3141	5113	16′-9 5/16″
050 HIGH HEAT	7055	3200	5090	16′-8 7/16″

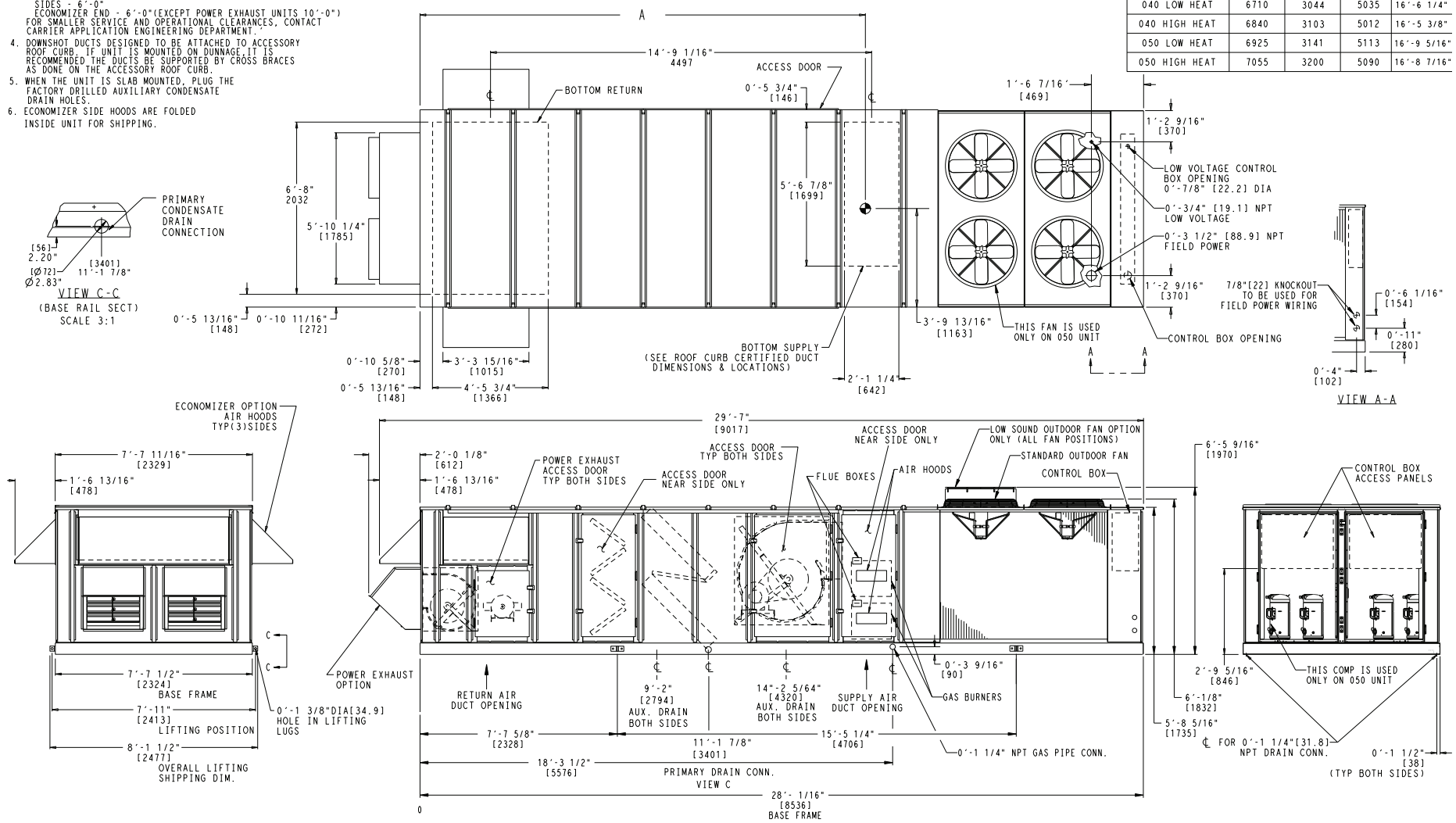

Fig. 14 — Base Unit Dimensional Drawing — 48P2,P3040-050 (Standard Chassis Unit Shown)

NOTES:
1. DIMENSIONS IN [ ] ARE IN MILLIMETERS.
2. ⊕ UNIT WEIGHT AND CENTER OF GRAVITY INCLUDES ECONOMIZER, LARGEST INDOOR FAN MOTOR AND HIGH CAPACITY EVAPORATOR COIL.
3. UNIT CLEARANCES
   TOP - DO NOT RESTRICT CONDENSER FANS
   CONTROL BOX END - 6'-0"
   SIDES - 6'-0"
   ECONOMIZER END - 6'-0"(EXCEPT POWER EXHAUST UNITS 10'-0")
   FOR SMALLER SERVICE AND OPERATIONAL CLEARANCES, CONTACT CARRIER APPLICATION ENGINEERING DEPARTMENT.'
4. SUGGESTED FIELD CONNECTIONS TO BE MADE INSIDE OR OUTSIDE OF 32.5 mm FLANGE.
5. WHEN THE UNIT IS SLAB MOUNTED, PLUG THE FACTORY DRILLED AUXILIARY CONDENSATE DRAIN HOLES.
6. ECONOMIZER SIDE HOODS ARE FOLDED INSIDE UNIT FOR SHIPPING.

UNIT SIZE	WEIGHT LBS.	WEIGHT KGS.	A MM	A FT. IN.
040 LOW HEAT	6710	3044	5035	16'-6 1/4"
040 HIGH HEAT	6840	3103	5012	16'-5 3/8"
050 LOW HEAT	6925	3141	5113	16'-9 5/16"
050 HIGH HEAT	7055	3200	5090	16'-8 7/16"

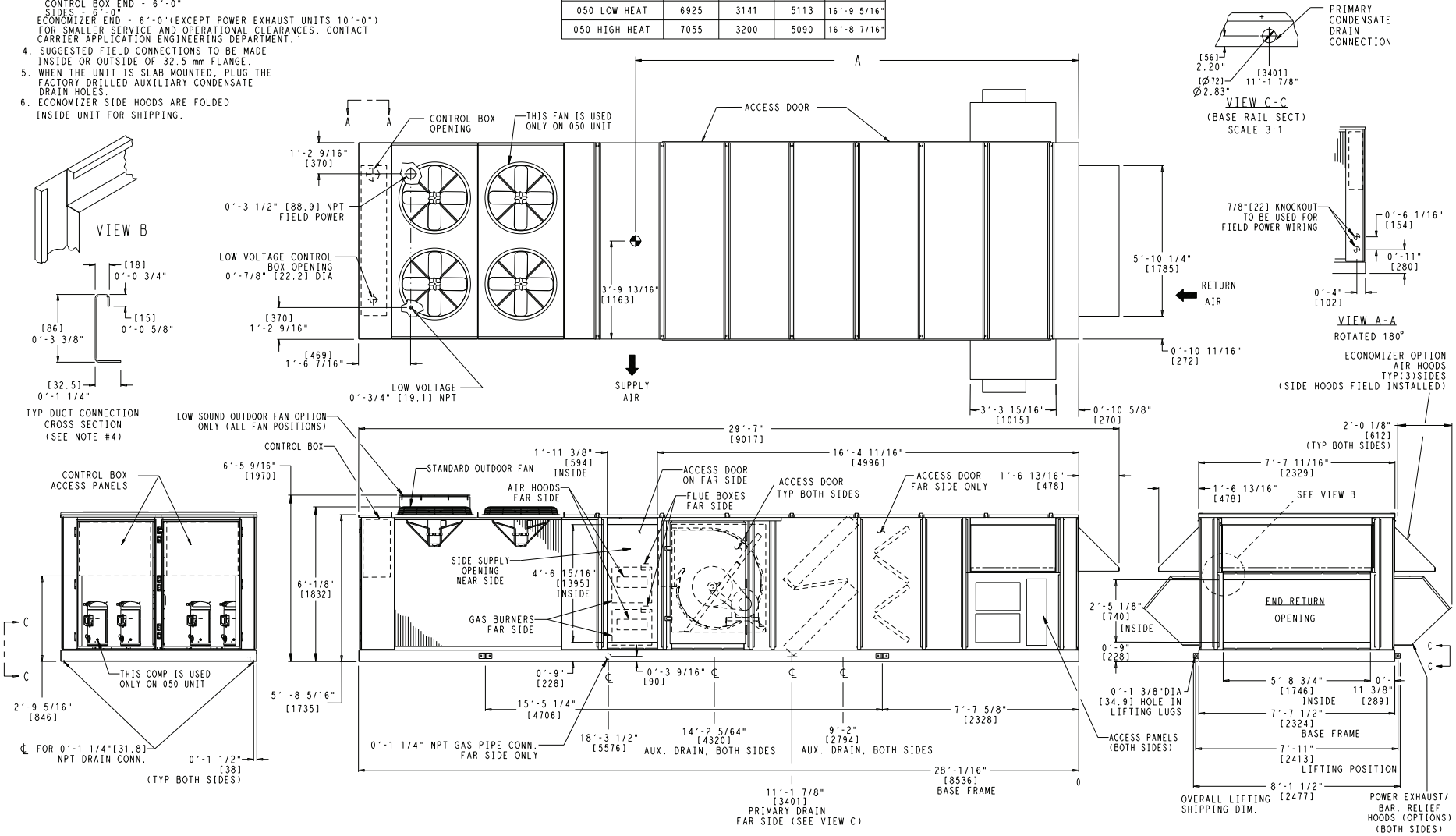

Fig. 15 — Base Unit Dimensional Drawing — 48P4,P5040-050 (Standard Chassis Unit Shown)

UNIT SIZE	WEIGHT LBS.	WEIGHT KGS.	A MM	A FT. IN.	B MM	B FT. IN.	C MM	C FT. IN.	D MM	D FT. IN.	E MM	E FT. IN.	F MM	F FT. IN.
055 LOW HEAT	9220	4182	2718	8′-11"	6541	21′-5 1/2"	5814	19′-7/8"	1163	3′-9 13/16"	11140	36′-6 9/16"	11524	37′-9 11/16"
060 LOW HEAT	9275	4207	2718	8′-11"	6541	21′-5 1/2"	5803	19′-1/2"	1163	3′-9 13/16"	11140	36′-6 9/16"	11524	37′-9 11/16"
055 HIGH HEAT	9350	4241	2718	8′-11"	6541	21′-5 1/2"	5816	19′-1"	1163	3′-9 13/16"	11140	36′-6 9/16"	11524	37′-9 11/16"
060 HIGH HEAT	9405	4266	2718	8′-11"	6541	21′-5 1/2"	5805	19′-9/16"	1163	3′-9 13/16"	11140	36′-6 9/16"	11524	37′-9 11/16"

NOTES:
1. DIMENSIONS IN [ ] ARE IN MILLIMETERS.
2. UNIT WEIGHT AND CENTER OF GRAVITY INCLUDES ECONOMIZER, LARGEST INDOOR FAN MOTOR AND HIGH CAPACITY EVAPORATOR COIL.
3. UNIT CLEARANCES
   TOP - DO NOT RESTRICT CONDENSER FANS
   CONTROL BOX END - 6′-0"
   SIDES - 6′-0"
   ECONOMIZER END - 6′-0"(EXCEPT POWER EXHAUST UNITS 10′-0")
   FOR SMALLER SERVICE AND OPERATIONAL CLEARANCES, CONTACT CARRIER APPLICATION ENGINEERING DEPARTMENT.′
4. DOWNSHOT DUCTS DESIGNED TO BE ATTACHED TO ACCESSORY ROOF CURB. IF UNIT IS MOUNTED ON DUNNAGE,IT IS RECOMMENDED THE DUCTS BE SUPPORTED BY CROSS BRACES AS DONE ON THE ACCESSORY ROOF CURB.
5. WHEN THE UNIT IS SLAB MOUNTED, PLUG THE FACTORY DRILLED AUXILIARY CONDENSATE DRAIN HOLES.
6. ECONOMIZER SIDE HOODS ARE FOLDED INSIDE UNIT FOR SHIPPING.

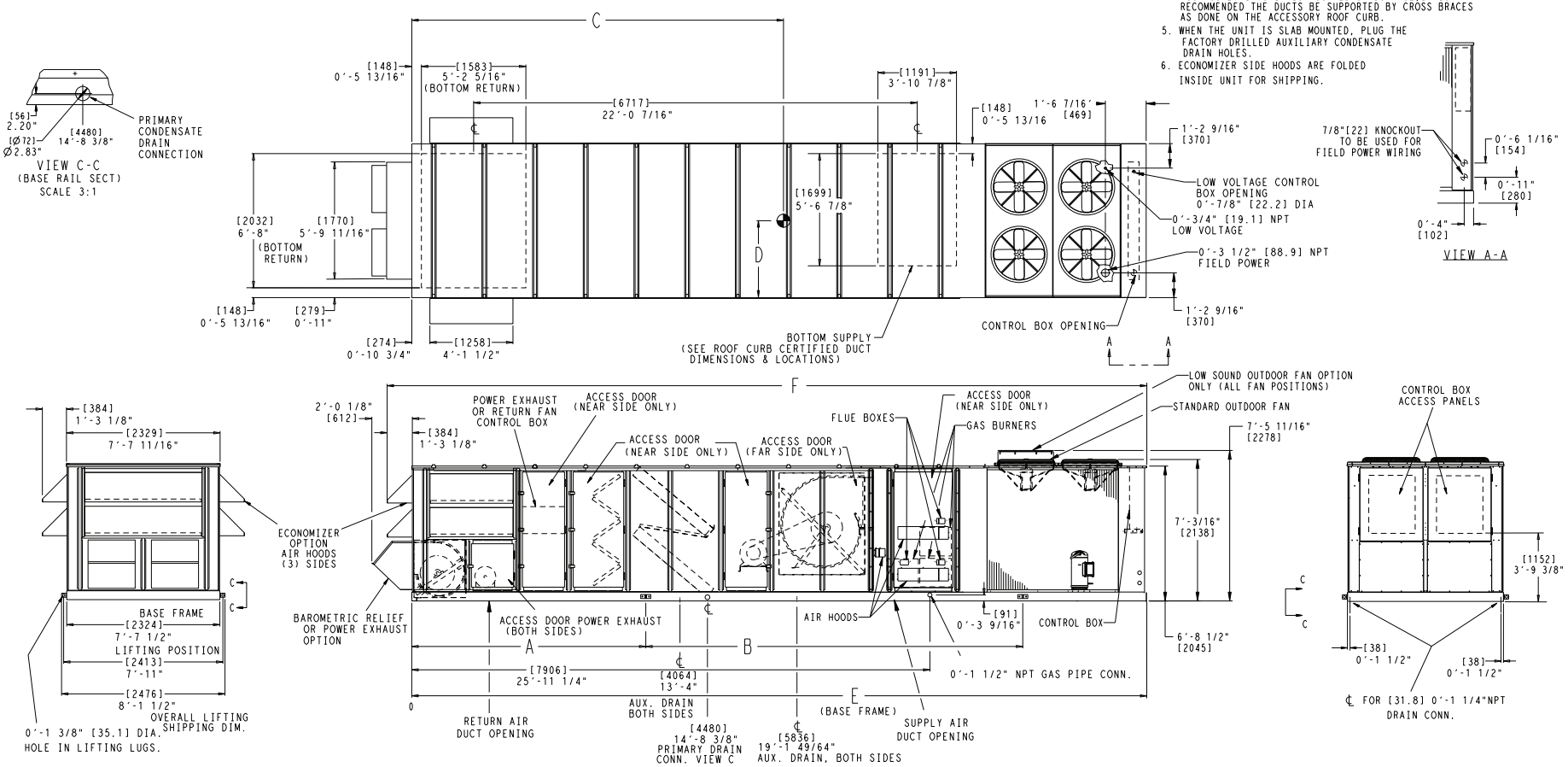

Fig. 16 — Base Unit Dimensional Drawing — 48P2,P3055,060 (Standard Chassis Unit Shown)

UNIT SIZE	WEIGHT LBS.	WEIGHT KGS.	A MM	A FT. IN.	B MM	B FT. IN.	C MM	C FT. IN.	D MM	D FT. IN.	E MM	E FT. IN.	F MM	F FT. IN.
055 LOW HEAT	9220	4182	2718	8′-11"	6541	21′-5 1/2"	5814	19′-7/8"	1163	3′-9 13/16"	11140	36′-6 9/16"	11524	37′-9 11/16"
060 LOW HEAT	9275	4207	2718	8′-11"	6541	21′-5 1/2"	5803	19′-1/2"	1163	3′-9 13/16"	11140	36′-6 9/16"	11524	37′-9 11/16"
055 HIGH HEAT	9350	4241	2718	8′-11"	6541	21′-5 1/2"	5816	19′-1"	1163	3′-9 13/16"	11140	36′-6 9/16"	11524	37′-9 11/16"
060 HIGH HEAT	9405	4266	2718	8′-11"	6541	21′-5 1/2"	5805	19′-9/16"	1163	3′-9 13/16"	11140	36′-6 9/16"	11524	37′-9 11/16"

NOTES:
1. DIMENSIONS IN [ ] ARE IN MILLIMETERS.
2. ◐ UNIT WEIGHT AND CENTER OF GRAVITY INCLUDES ECONOMIZER, LARGEST INDOOR FAN MOTOR AND HIGH CAPACITY EVAPORATOR COIL.
3. UNIT CLEARANCES
   TOP - DO NOT RESTRICT CONDENSER FANS
   CONTROL BOX END - 6′-0"
   SIDES - 6′-0" (EXCEPT POWER EXHAUST UNITS 10′-0")
   ECONOMIZER END - 6′-0"
   FOR SMALLER SERVICE AND OPERATIONAL CLEARANCES, CONTACT CARRIER APPLICATION ENGINEERING DEPARTMENT.
4. SUGGESTED FIELD CONNECTIONS TO BE MADE INSIDE OR OUTSIDE OF 32.5 mm FLANGE.
5. WHEN THE UNIT IS SLAB MOUNTED, PLUG THE FACTORY DRILLED AUXILIARY CONDENSATE DRAIN HOLES.
6. ECONOMIZER SIDE HOODS ARE FOLDED IN FOR SHIPPING.

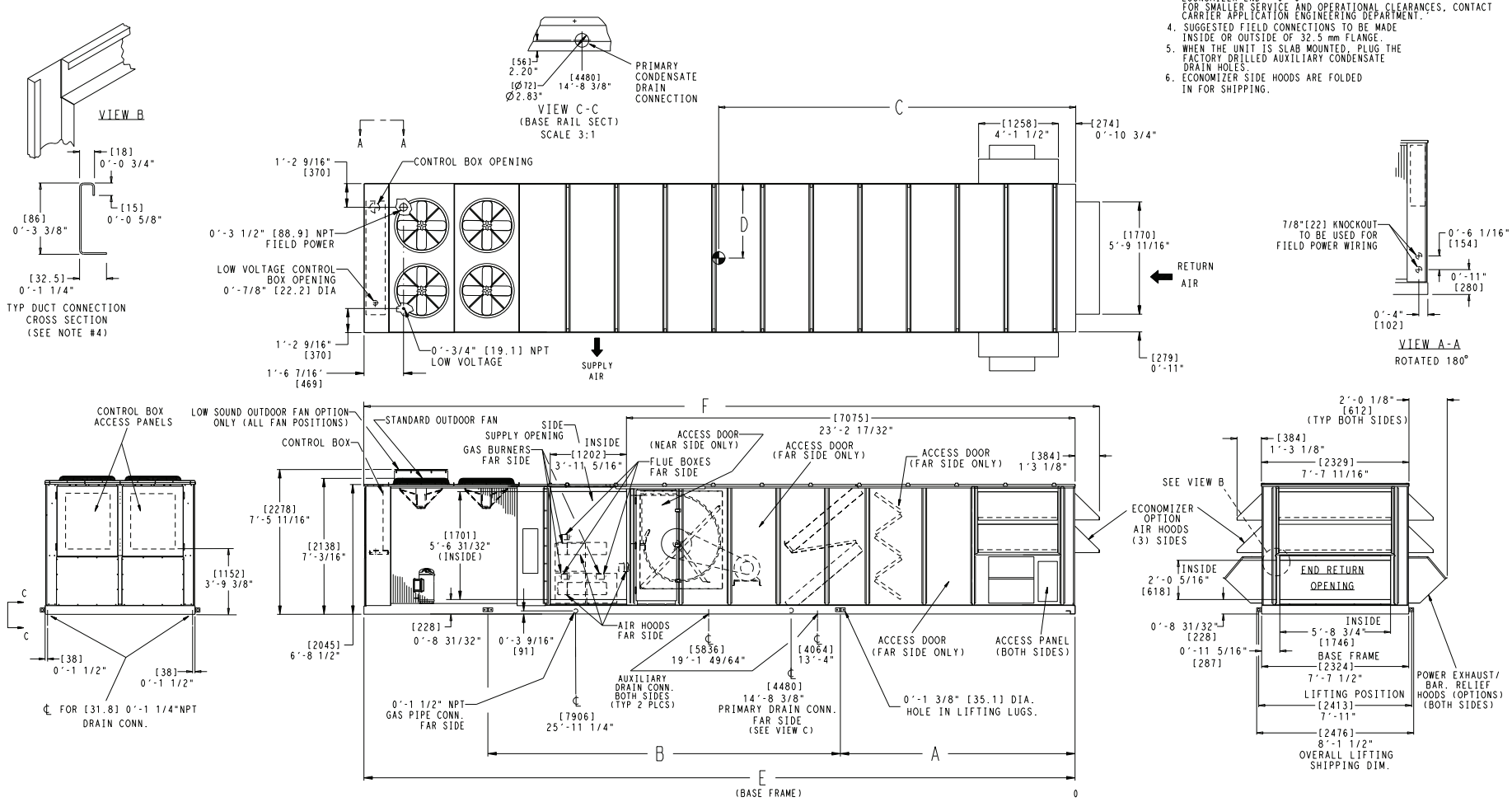

Fig. 17 — Base Unit Dimensional Drawing — 48P4,P5055,060 (Standard Chassis Unit Shown)

UNIT SIZE	WEIGHT LBS.	WEIGHT KGS.	A MM	A FT. IN.	B MM	B FT. IN.	C MM	C FT. IN.	D MM	D FT. IN.	E MM	E FT. IN.	F MM	F FT. IN.
070 LOW HEAT	9615	4361	3543	11′-7 1/2"	5715	18′-9"	6214	20′-4 10/16"	1021	3′- 4 3/16"	11378	37′-3 15/16"	11762	38′-7 1/16"
070 HIGH HEAT	9745	4420	3543	11′-7 1/2"	5715	18′-9"	6217	20′-4 12/16"	1021	3′- 4 3/16"	11378	37′-3 15/16"	11762	38′-7 1/16"

NOTES:
1. DIMENSIONS IN [ ] ARE IN MILLIMETERS.
2. ◐ UNIT WEIGHT AND CENTER OF GRAVITY INCLUDES ECONOMIZER, LARGEST INDOOR FAN MOTOR AND HIGH CAPACITY EVAPORATOR COIL.
3. UNIT CLEARANCES
   TOP - DO NOT RESTRICT CONDENSER FANS
   CONTROL BOX END - 6′-0"
   SIDES - 6′-0"
   ECONOMIZER END - 6′-0"(EXCEPT POWER EXHAUST UNITS 10′-0")
   FOR SMALLER SERVICE AND OPERATIONAL CLEARANCES, CONTACT CARRIER APPLICATION ENGINEERING DEPARTMENT.′
4. DOWNSHOT DUCTS DESIGNED TO BE ATTACHED TO ACCESSORY ROOF CURB. IF UNIT IS MOUNTED ON DUNNAGE,IT IS RECOMMENDED THE DUCTS BE SUPPORTED BY CROSS BRACES AS DONE ON THE ACCESSORY ROOF CURB.
5. WHEN THE UNIT IS SLAB MOUNTED, PLUG THE FACTORY DRILLED AUXILIARY CONDENSATE DRAIN HOLES.
6. ECONOMIZER SIDE HOODS ARE FOLDED INSIDE UNIT FOR SHIPPING.

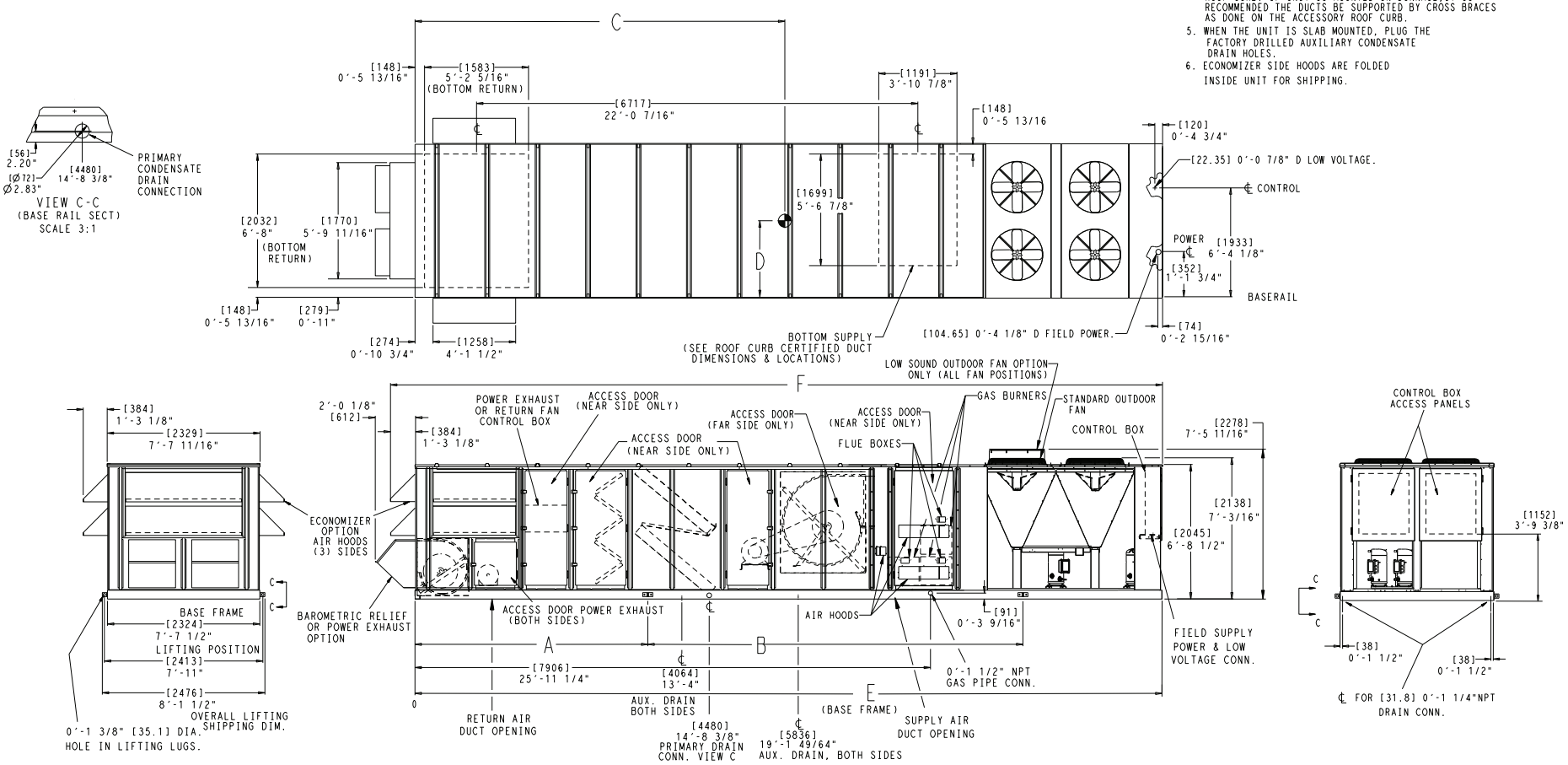

Fig. 18 — Base Unit Dimensional Drawing — 48P2,P3070 (Standard Chassis Unit Shown)

UNIT SIZE	WEIGHT LBS.	WEIGHT KGS.	A MM	A FT. IN.	B MM	B FT. IN.	C MM	C FT. IN.	D MM	D FT. IN.	E MM	E FT. IN.	F MM	F FT. IN.
070 LOW HEAT	9615	4361	3543	11′-7 1/2"	5715	18′-9"	6214	20′-4 5/8"	1021	3′- 4 3/16"	11378	37′-3 15/16"	11762	38′-7 1/16"
070 HIGH HEAT	9745	4420	3543	11′-7 1/2"	5715	18′-9"	6217	20′-4 3/4"	1021	3′- 4 3/16"	11378	37′-3 15/16"	11762	38′-7 1/16"

NOTES:
1. DIMENSIONS IN [ ] ARE IN MILLIMETERS.
2. ⊕ UNIT WEIGHT AND CENTER OF GRAVITY INCLUDES ECONOMIZER, LARGEST INDOOR FAN MOTOR AND HIGH CAPACITY EVAPORATOR COIL.
3. UNIT CLEARANCES
   TOP - DO NOT RESTRICT CONDENSER FANS
   CONTROL BOX END - 6′-0"
   SIDES - 6′-0" (EXCEPT POWER EXHAUST UNITS 10′-0")
   ECONOMIZER END - 6′-0"
   FOR SMALLER SERVICE AND OPERATIONAL CLEARANCES, CONTACT CARRIER APPLICATION ENGINEERING DEPARTMENT.
4. SUGGESTED FIELD CONNECTIONS TO BE MADE INSIDE OR OUTSIDE OF 32.5 mm FLANGE.
5. WHEN THE UNIT IS SLAB MOUNTED, PLUG THE FACTORY DRILLED AUXILIARY CONDENSATE DRAIN HOLES.
6. ECONOMIZER SIDE HOODS ARE FOLDED IN FOR SHIPPING.

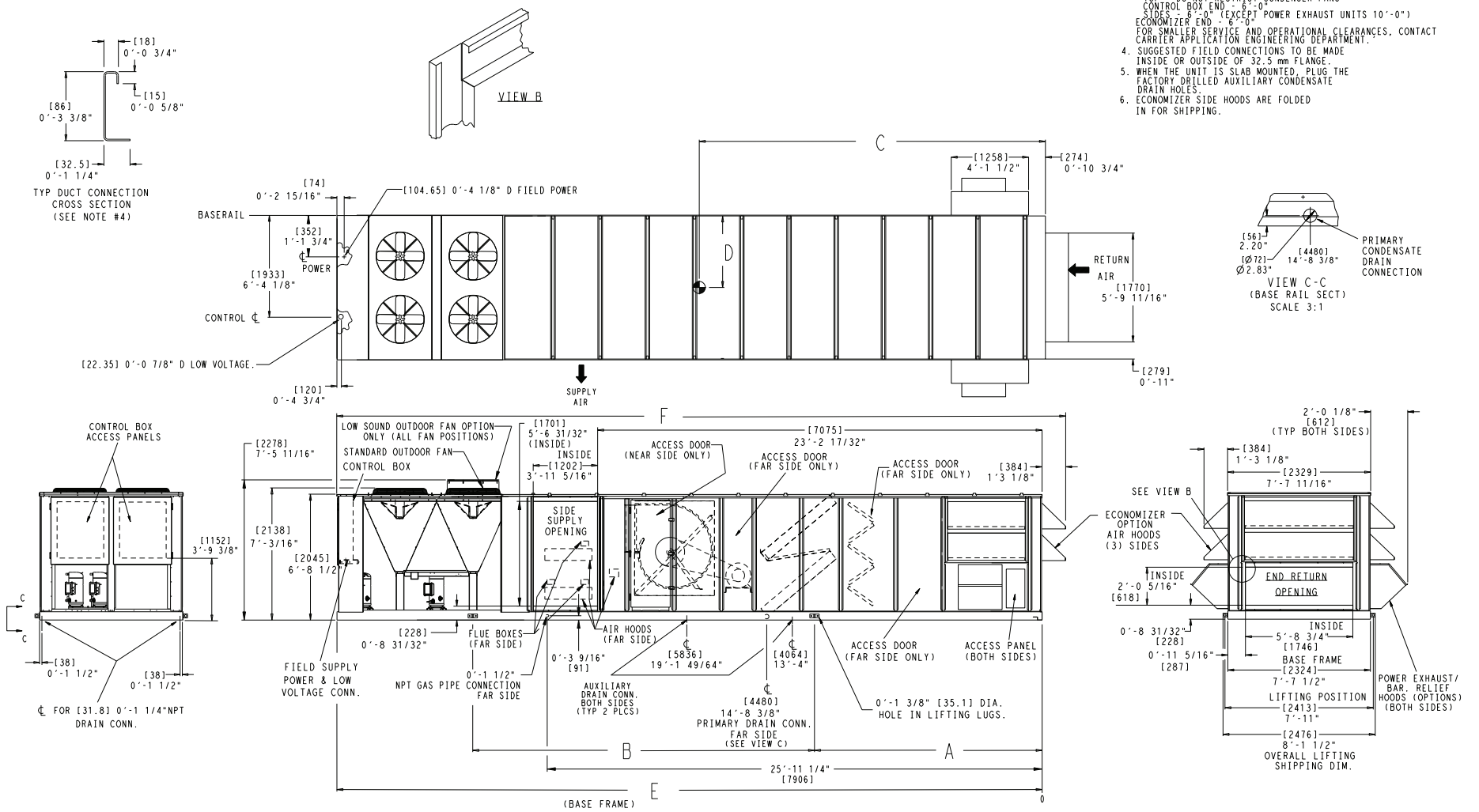

Fig. 19 — Base Unit Dimensional Drawing — 48P4,P5070 (Standard Chassis Unit Shown)

UNIT SIZE	WEIGHT LBS.	WEIGHT KGS.	A MM	A FT. IN.	B MM	B FT. IN.	C MM	C FT. IN.	D MM	D FT. IN.	E MM	E FT. IN.	F MM	F FT. IN.
075 LOW HEAT	13499	6123	3833	12′-6 15/16″	7927	26′-0 1/16″	7367	24′-2″	1021	3′-4 3/16″	13380	43′-10 3/4″	13967	45′-9 7/8″
090 LOW HEAT	14097	6394	3833	12′-6 15/16″	7927	26′-0 1/16″	7561	24′-9 11/16″	1054	3′-5 8/16″	14557	47′-9 1/8″	15144	49′-8 1/4″
100 LOW HEAT	14119	6404	3833	12′-6 15/16″	7927	26′-0 1/16″	7546	24′-9 1/16″	1054	3′-5 8/16″	14557	47′-9 1/8″	15144	49′-8 1/4″
075 HIGH HEAT	13629	6182	3833	12′-6 15/16″	7927	26′-0 1/16″	7400	24′-3 5/16″	1021	3′-4 3/16″	13380	43′-10 3/4″	13967	45′-9 7/8″
090 HIGH HEAT	14227	6453	3833	12′-6 15/16″	7927	26′-0 1/16″	7593	24′-10 15/16″	1054	3′-5 8/16″	14557	47′-9 1/8″	15144	49′-8 1/4″
100 HIGH HEAT	14249	6463	3833	12′-6 15/16″	7927	26′-0 1/16″	7574	24′-10 3/16″	1054	3′-5 8/16″	14557	47′-9 1/8″	15144	49′-8 1/4″

NOTES:
1. DIMENSIONS IN [ ] ARE IN MILLIMETERS.
2. UNIT WEIGHT AND CENTER OF GRAVITY INCLUDES ECONOMIZER, LARGEST INDOOR FAN MOTOR, HIGH CAPACITY EVAPORATOR COIL AND LARGEST POWER EXHAUST MOTOR.
3. UNIT CLEARANCES.
   TOP - DO NOT RESTRICT CONDENSER FANS
   CONTROL BOX END - 6′-0″
   SIDES - 6′-0″ (EXCEPT POWER EXHAUST UNITS 10′-0″)
4. SUGGESTED FIELD CONNECTIONS TO BE MADE INSIDE OR OUTSIDE OF 32.5 mm FLANGE.
5. WHEN THE UNIT IS SLAB MOUNTED, PLUG THE FACTORY DRILLED AUXILIARY CONDENSATE DRAIN HOLES.
6. ECONOMIZER SIDE HOODS ARE FOLDED IN FOR SHIPPING.

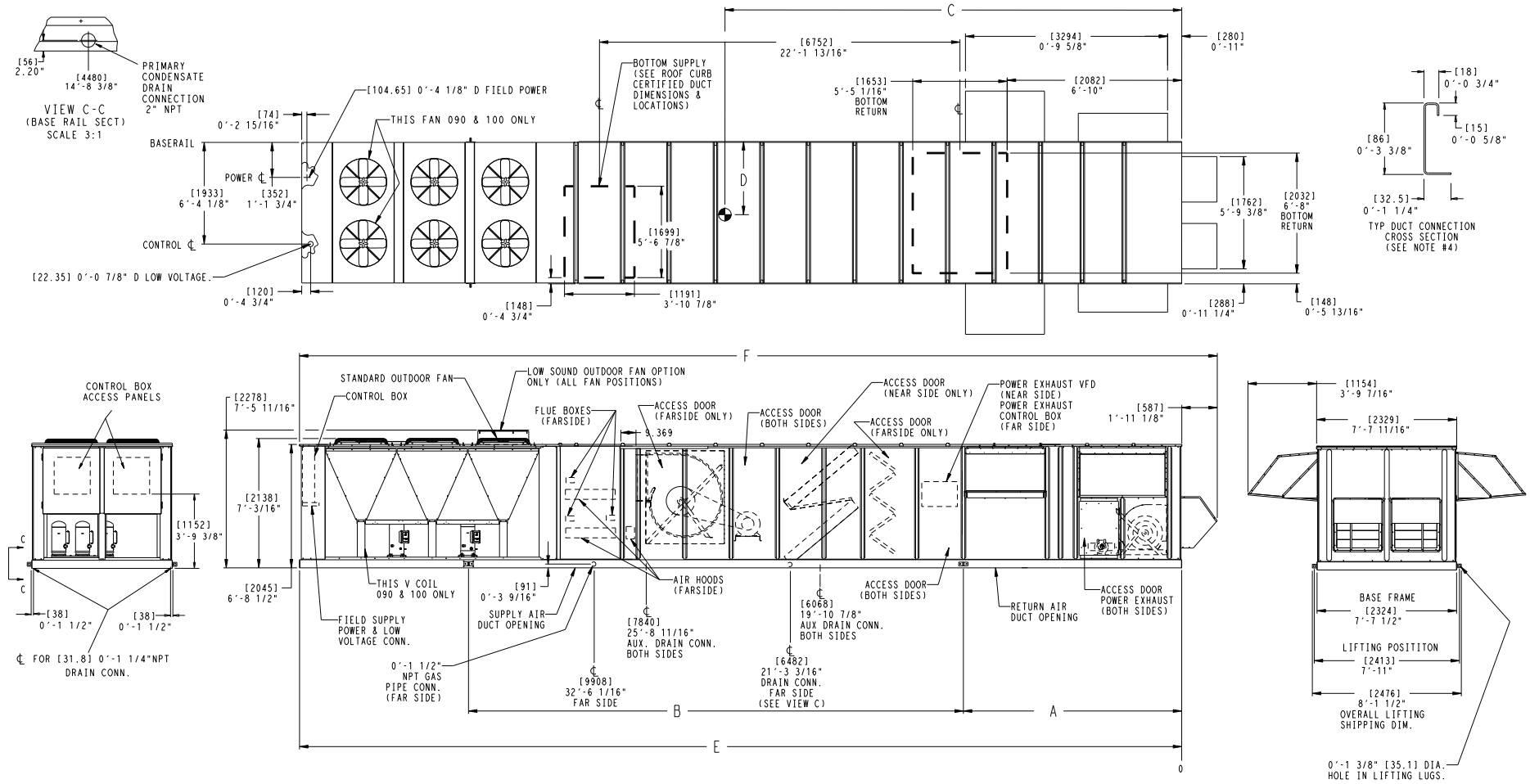

Fig. 20 — Base Unit Dimensional Drawing — 48P2,P3075-100 (Standard Chassis Unit with Optional High-Capacity Power Exhaust Shown)

UNIT SIZE	WEIGHT LBS.	WEIGHT KGS.	A MM	A FT.IN.	B MM	B FT.IN.	C MM	C FT.IN.	D MM	D FT.IN.	E MM	E FT.IN.	F MM	F FT.IN.
075 LOW HEAT	12321	5589	3544	11′-7 1/2"	6495	21′-3 11/16"	5706	18′-8 5/8"	1021	3′-4 3/16"	11378	37′-3 5/16"	11762	38′-7 1/16"
090 LOW HEAT	12921	5861	3544	11′-7 1/2"	6495	21′-3 11/16"	5908	19′-4 9/16"	1054	3′-5 1/2"	12555	41′-2 5/16"	12939	42′-5 7/16"
100 LOW HEAT	12941	5870	3544	11′-7 1/2"	6495	21′-3 11/16"	5853	19′-2 7/16"	1054	3′-5 1/2"	12555	41′-2 5/16"	12939	42′-5 7/16"
075 HIGH HEAT	12451	5648	3544	11′-7 1/2"	6495	21′-3 11/16"	5764	18′-10 15/16"	1021	3′-4 3/16"	11378	37′-3 5/16"	11762	38′-7 1/16"
090 HIGH HEAT	13051	5920	3544	11′-7 1/2"	6495	21′-3 11/16"	5936	19′-5 3/4"	1054	3′-5 1/2"	12555	41′-2 5/16"	12939	42′-5 7/16"
100 HIGH HEAT	13071	5929	3544	11′-7 1/2"	6495	21′-3 11/16"	5915	19′-4 7/8"	1054	3′-5 1/2"	12555	41′-2 5/16"	12939	42′-5 7/16"

NOTES:
1. DIMENSIONS IN [ ] ARE IN MILLIMETERS.
2. UNIT WEIGHT AND CENTER OF GRAVITY INCLUDES ECONOMIZER, LARGEST INDOOR FAN MOTOR, HIGH CAPACITY EVAPORATOR COIL AND LARGEST POWER EXHAUST MOTOR.
3. UNIT CLEARANCES
   TOP - DO NOT RESTRICT CONDENSER FANS
   CONTROL BOX END - 6′-0"
   SIDES - 6′-0"
   ECONOMIZER END - 6′-0" (EXCEPT POWER EXHAUST UNITS 10′-0")
   FOR SMALLER SERVICE AND OPERATIONAL CLEARANCES, CONTACT CARRIER APPLICATION ENGINEERING DEPARTMENT.′
4. SUGGESTED FIELD CONNECTIONS TO BE MADE INSIDE OR OUTSIDE OF 32.5 mm FLANGE.
5. WHEN THE UNIT IS SLAB MOUNTED, PLUG THE FACTORY DRILLED AUXILIARY CONDENSATE DRAIN HOLES.
6. ECONOMIZER SIDE HOODS ARE FOLDED IN FOR SHIPPING.

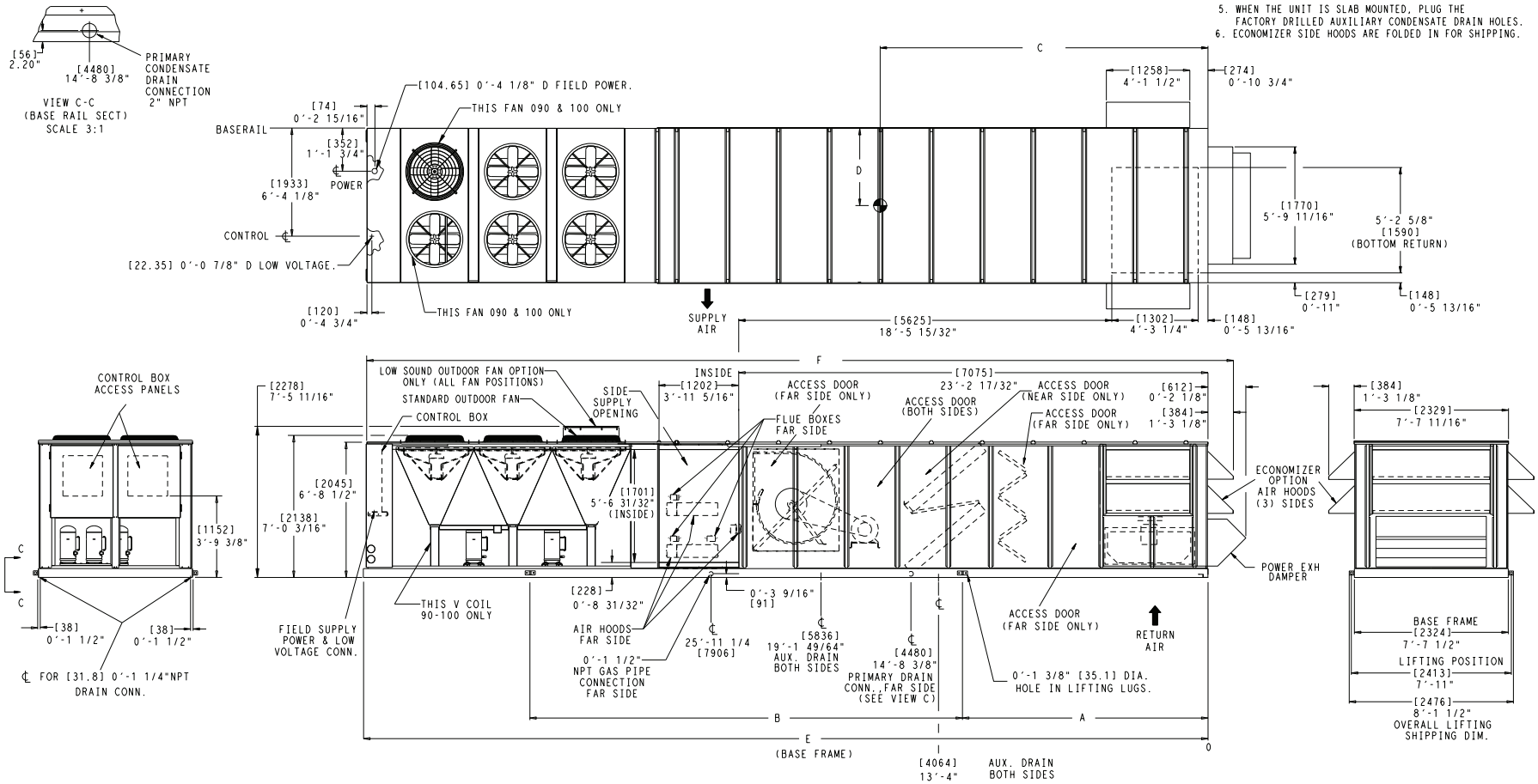

Fig. 21 — Base Unit Dimensional Drawing — 48P4,P5075-100 (Standard Chassis Unit with Optional Return Fan Shown)

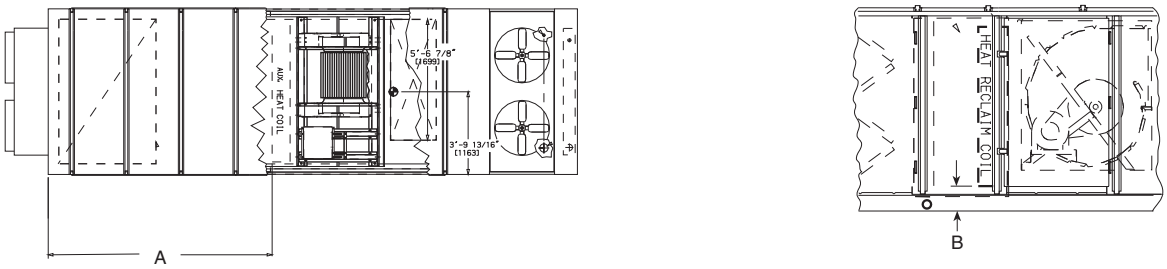

AUXILIARY COIL LOCATION (in.)

UNIT SIZES	DISTANCE A	HEIGHT B
030,035	123.0	6.6
040,050	156.8	6.6
055-070	200.4	6.6
075-100	200.4	6.6
075-100 with High-Capacity Power Exhaust	279.2	6.6

Fig. 22 — Units with Optional Extended Chassis — Location of Coil Tracks

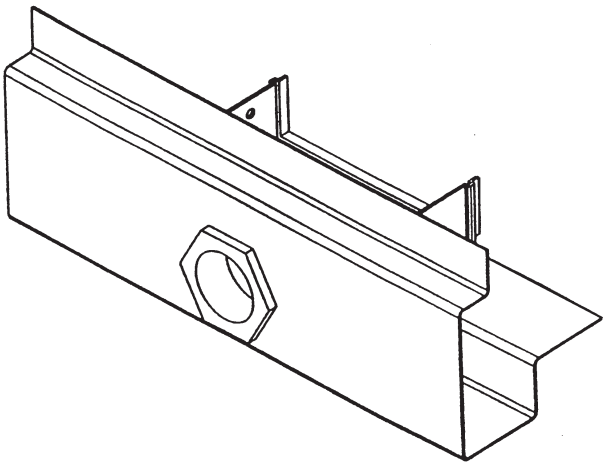

Fig. 23 — Primary Drain Connection

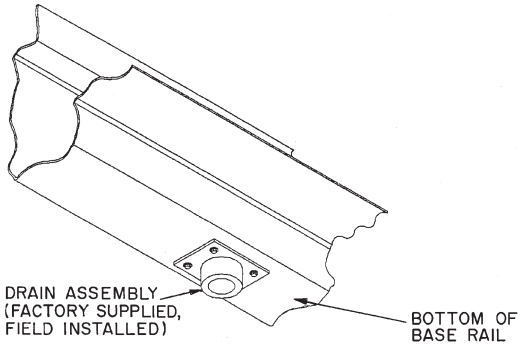

Fig. 25 — Secondary Condensate Drain Location (Curb Mount)

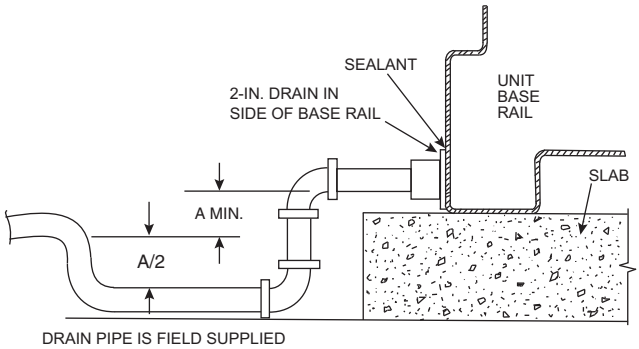

A = 4-in. (102 mm) min — Sizes 030-070
7-in. (178 mm) min — Sizes 075-100

Fig. 24 — Primary Condensate Drain Piping Details (Slab and Curb Mounted) and Slab-Mounted Secondary Condensate Drain Piping Details

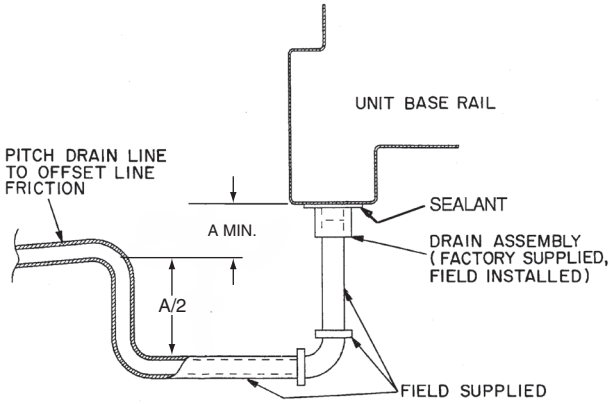

A = 4-in. (102 mm) min — sizes 030-070
7-in. (178 mm) min — sizes 075-100

Fig. 26 — Curb-Mounted Secondary Condensate Drain Pipe Details

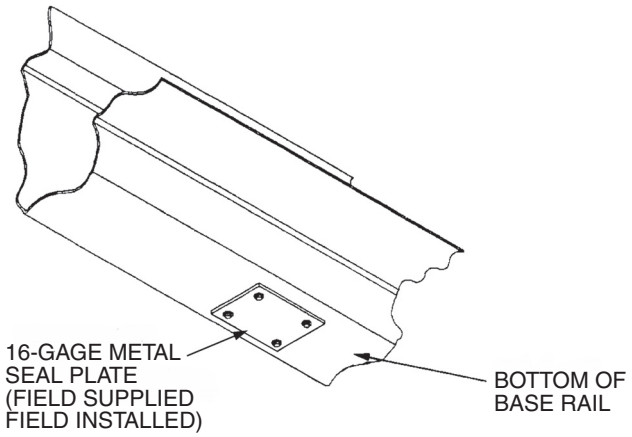

Fig. 27 — Secondary Drain Seal Plate Location (Slab Mount)

Step 9 — Install Outdoor Hoods (Units without Optional High-Capacity Power Exhaust)

UNIT SIZES 030-050

25% Outdoor-Air Hoods (Units without Economizer Option) (Fig. 28)

1. Outdoor-air hoods are shipped bolted to the unit in a shipping position. Remove the 6 screws holding each 25% outdoor-air hood shipping cover in place.
2. Remove the holddown screw from each upper corner of each hood.
3. Pivot hoods outward (2 hoods).
4. Install 17 screws around outside of each hood. (Screws are in the fastener package taped to the basepan inside the fan section.)
5. Apply a bead of RTV or similar sealant to corner of each hood at pivot points to prevent water leaks. See Fig. 29.

Economizer Hoods (Units with Economizer Option) (Fig. 30 and 31)

1. Outdoor-air hoods are shipped bolted to the unit in a shipping position.
2. Remove the holddown screw from the lower corner of each hood.
3. Pivot hoods out and upward (2 hoods).
4. Apply seal strip to upper horizontal flange of the hood top extensions. Apply seal strip to vertical flange of hood sides. (Hood top extensions, sides, screws, and seal strip are shipped inside the fan section of the unit.)
5. Install hood top extensions on bottom side of hood using 6 screws on each hood. Install hood sides using 10 screws on each side (7 along the top, 3 to fasten to unit side wall).
6. Apply a bead of RTV or similar sealant to corners of economizer hoods at pivot points to prevent water leaks. See Fig. 29.

UNIT SIZES 055-100

25% Outdoor-Air Hoods (Fig. 32) — The outdoor-air hoods are factory installed on the 055-100 units.

Economizer Hoods (Units with Economizer Option) (Fig. 33-35)

1. Outdoor-air hoods are shipped bolted to the unit in a shipping position.
2. Remove the holddown screw from the lower corner of each economizer hood.
3. Pivot hoods out and upward (4 hoods).
4. Apply seal strip to upper horizontal flange of the hood top extensions. Apply seal strip to vertical flange of hood sides. (Hood top extensions, sides, screws, and seal strip are shipped inside the fan section of the unit.)
5. Install hood top extensions on bottom side of hood top using 6 screws for each hood. Install hood sides using 10 screws for each side (7 along the top, 3 to fasten to unit side wall).
6. Apply a bead of RTV or similar sealant to corners of economizer hoods at pivot points to prevent water leaks. See Fig. 29.

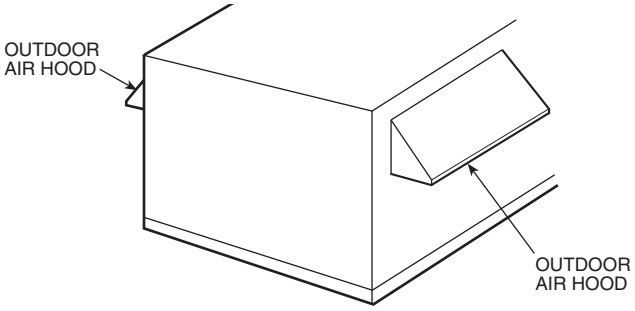

Fig. 28 — Outdoor Air Hood Installation (Sizes 030-050)

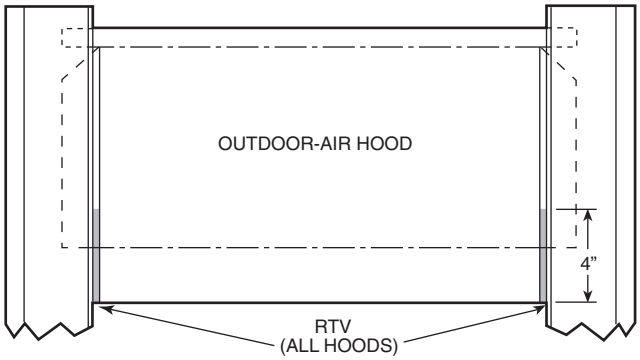

Fig. 29 — Outdoor-Air and Economizer Hood

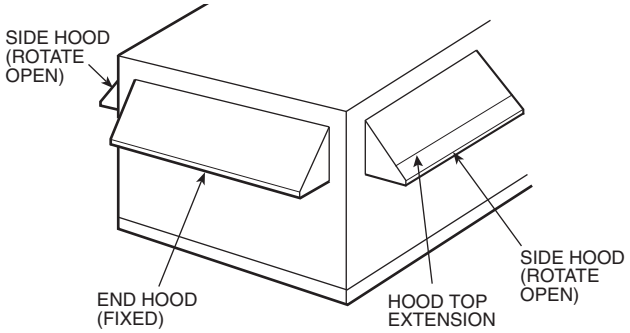

Fig. 30 — Economizer Outdoor-Air Hood Installation (Sizes 030-050)

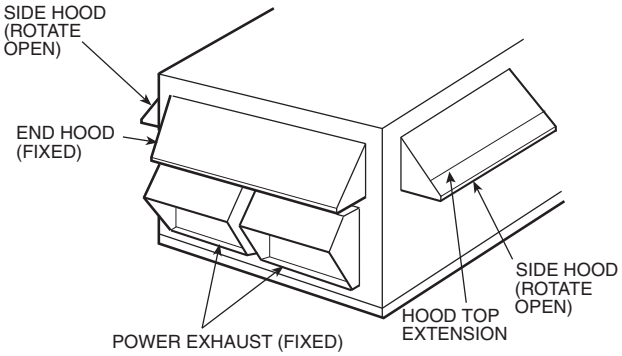

Fig. 31 — Economizer with Power Exhaust Outdoor-Air Hood Installation (Sizes 030-050)

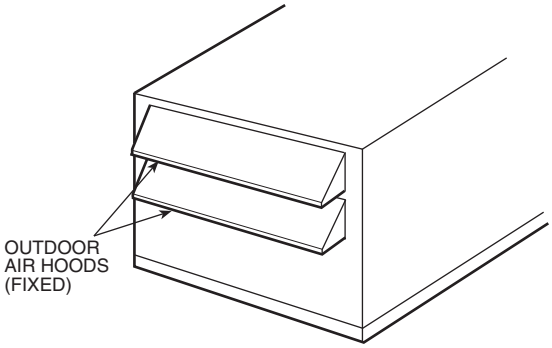

Fig. 32 — 25% Outdoor-Air Hood Location (Sizes 055-105)

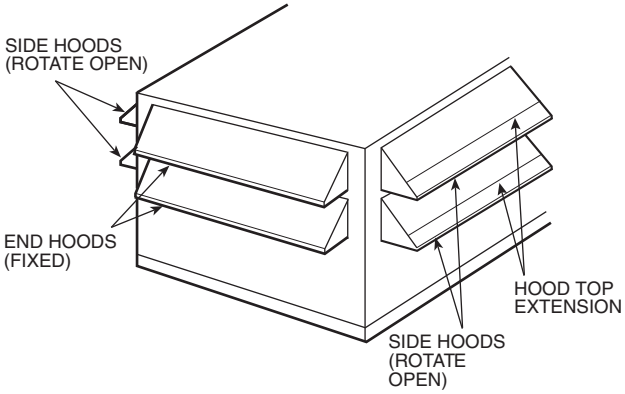

Fig. 33 — Economizer Outdoor-Air Hood Installation (Sizes 055-100)

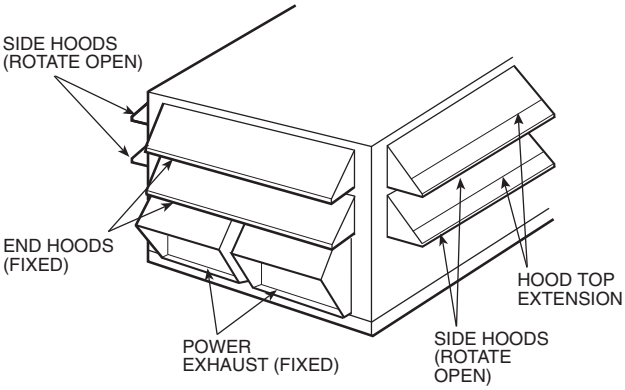

Fig. 34 — Economizer with Power Exhaust Outdoor-Air Hood Installation (Sizes 055-100)

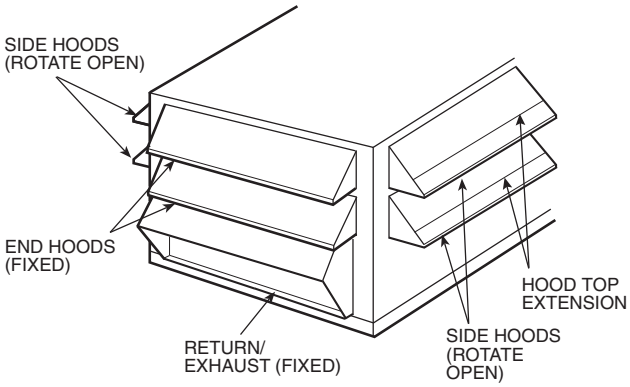

Fig. 35 — Economizer with Return Fan Outdoor-Air Hood Installation (Units with Optional Return Fan)

Step 10 — Install Economizer Hoods (Units with Optional High-Capacity Power Exhaust) — The economizer uses a total of 4 outdoor intake hoods, 2 on each side of the unit. See Fig. 36. Two small hoods (one per side) are factory-installed and are pivoted inside the unit chassis for shipment. Two large hoods are shipped in packages located inside the unit. The large hoods (one on each side) require field assembly and mounting.

INSTALL SMALL HOODS — To install the small economizer hoods, perform the following procedure:

1. Remove the 10 screws holding each of the small economizer hood shipping covers in place.
2. Pivot hoods outward. (There are a total of 2 hoods.)
3. Apply seal strip to vertical flange of hood sides.
4. Install 15 screws (4 each side, 7 across top) around the outside of each hood. Screws are in the fastener package taped to the basepan inside the fan section.
5. Apply a bead of RTV or similar sealant to corner of economizer hood at pivot points to prevent water leaks. (See Fig. 29.)

INSTALL LARGE HOODS — Large hoods are shipped disassembled in the economizer section of the unit behind the large economizer hood shipping cover. See Fig. 37 for assembly details for large economizer hoods. To install the large economizer hoods, perform the following procedure:

1. Remove the 17 screws holding each of the large economizer hood shipping covers in place.
2. Remove the packages containing the disassembled large economizer hoods (total of 2 packages). Each package contains the following (see Fig. 37 for Item numbers): left hood side (Item 1), right hood side (Item 2), hood top (Item 3), hood front (Item 4), top filter flange (Item 5), 4 side filter flanges (Item 6), bottom support (Item 7), front support (Item 8), 6 filters (Item 9), 9 filter clips (Item 10), seal strip, and fasteners.
3. Place seal strip on backside of bottom support (Item 7) along entire length of support, covering 6 clearance holes.
4. Attach bottom support piece (Item 7) to unit. Be sure seal strip is between bottom support and panel on unit.
5. Place seal strip on $^3/_4$-in. flange on both the left and right hood sides (Items 1 and 2).
6. Attach the side filter flanges (Item 6) to the left and right hood sides (Items 1 and 2), 2 on each hood side.
7. Attach left and right hood sides (Items 1 and 2) to unit. Be sure seal strip is between hood side and unit.
8. Place seal strip on $^3/_4$-in. flange on hood top (Item 3).
9. Attach top filter flange (Item 5) to hood top (Item 3).
10. Attach top hood to unit and to hood sides. Be sure seal strip is between hood top and unit.
11. Attach front support (Item 8) between left and right hood sides.
12. Place seal strip on all filter flanges.
13. Attach filter clips (Item 10) to front and bottom supports (Items 7 and 8).
14. Install filters (Item 9). Filters are held in place with filter clips.
15. Attach hood front (Item 4) to hood top and sides.
16. Apply RTV or similar sealant to 6 places shown in Fig. 37.

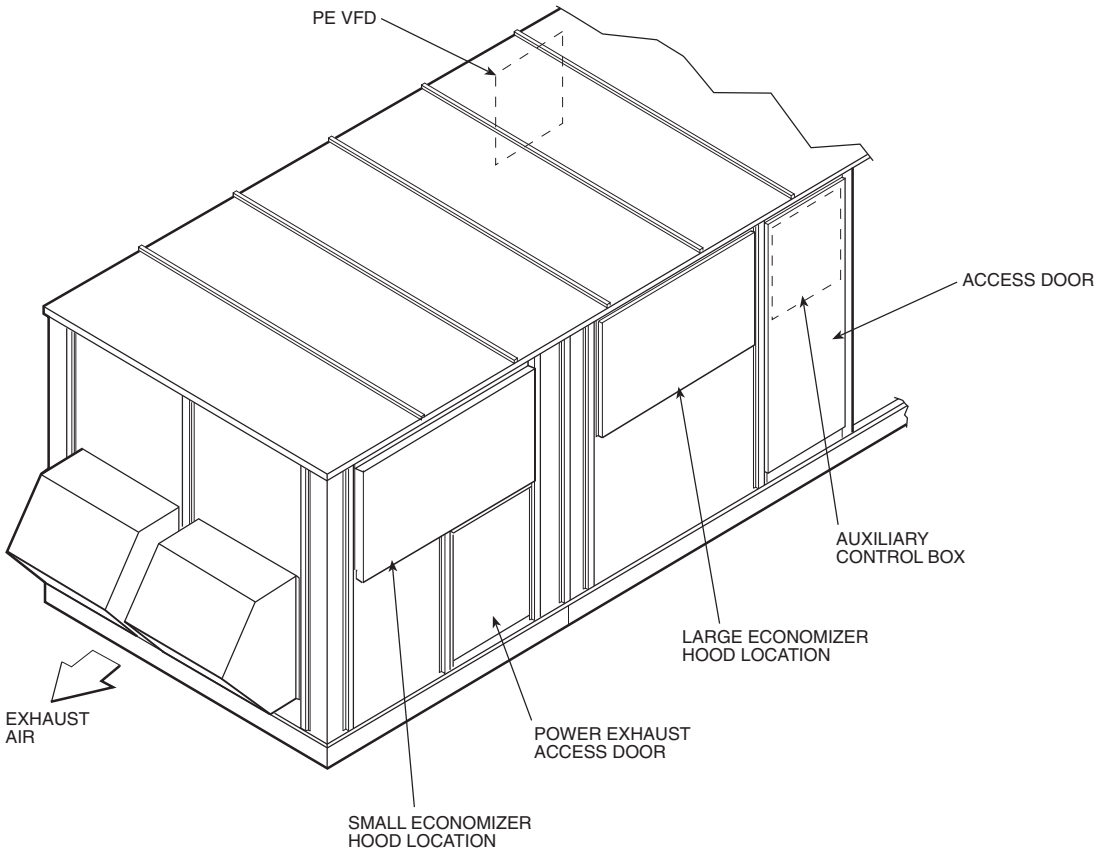

LEGEND

PE VFD — Power Exhaust Variable Frequency Drive

Fig. 36 — Economizer Hood Location — Units with High-Capacity Power Exhaust

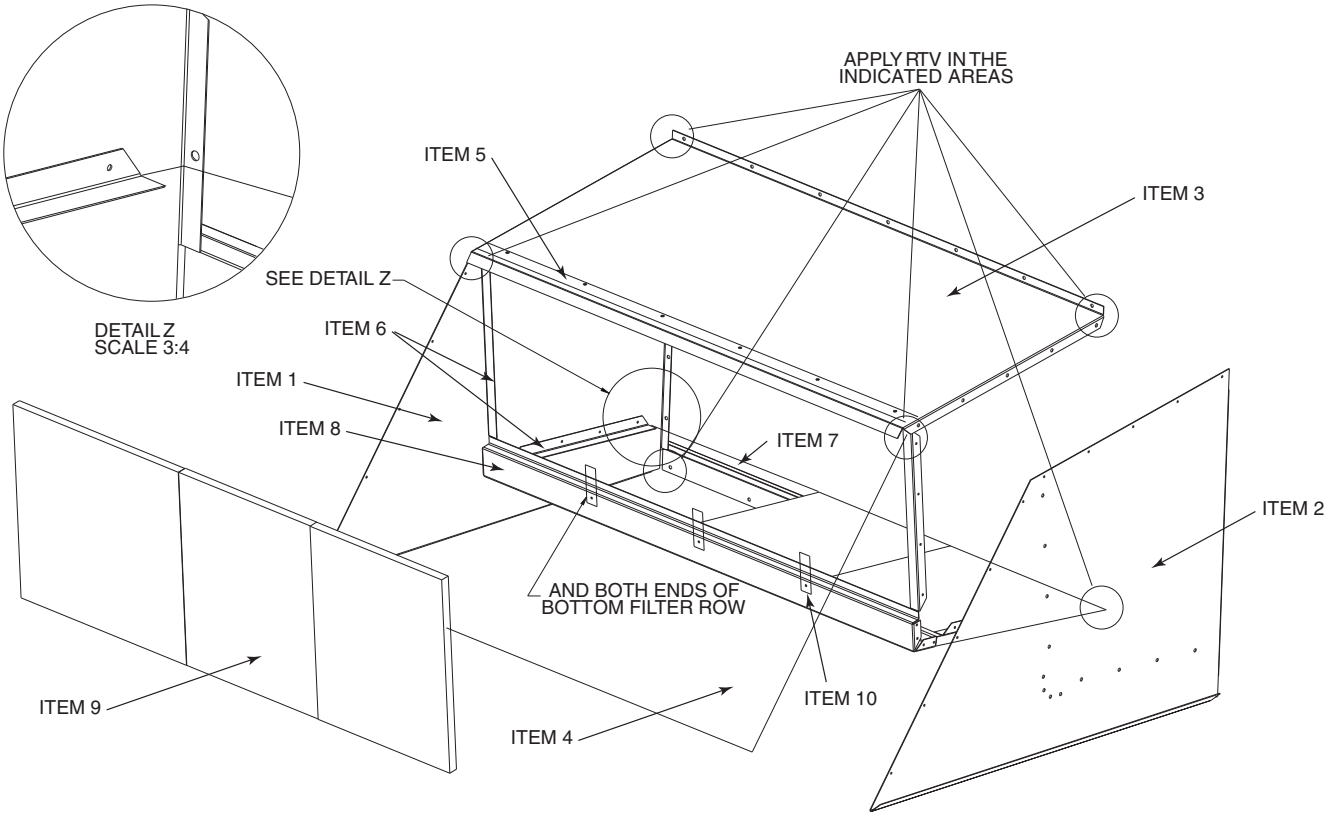

Fig. 37 — Large Economizer Hood Assembly

Step 11 — Route Field Wiring

UNIT SIZES 030-060 — Field wiring can be brought into the unit through the basepan and roof curb or through the corner post in the side of the unit next to the control box.

A $3^1/_2$-in. FPT coupling for field power and a $^3/_4$-in. FPT coupling for 24 v control wiring are provided in the basepan. There are two $^7/_8$-in. pilot holes in the corner post as shown on the certified drawings. Use these holes as pilot holes for making the hole for field-supplied conduit in the corner post for field power wiring.

⚠CAUTION

Use care when drilling near condenser coil. Damage to unit could result.

If field power wiring is brought through the roof curb, route wiring out through one of the holes to the field-supplied disconnect and then back into the unit through the other hole. See Fig. 38 and 39 for recommended disconnect location.

If power wiring is brought through the side of the unit, route wiring from field-supplied disconnect through top hole into unit.

If control wiring is to be brought in through the side of the unit, a $^7/_8$-in. diameter hole must be drilled in the corner post next to the control box.

UNIT SIZES 070-100 — Field wiring is brought into the unit through the bottom of the control box. Wiring can be brought through the roof curb through field-supplied watertight connections. See Fig. 40.

A $4^5/_{32}$-in. hole for field power wiring and a $^7/_8$-in. hole for 24 v control wiring are provided in the bottom of the control box. Field-supplied couplings must be used when routing wiring into the control box.

See Fig. 40 for recommended disconnect location.

Step 12 — Make Field Electrical Connections

IMPORTANT: Units with VFDs (variable frequency drives) generate, use, and can radiate radio frequency energy. If units are not installed and used in accordance with these instructions, they may cause radio interference. They have been tested and found to comply with limits of a Class A computing device as defined by FCC (Federal Communications Commission) regulations, Subpart J of Part 15, which are designed to provide reasonable protection against such interference when operated in a commercial environment.

POWER WIRING — Units are factory wired for the voltage shown on the unit nameplate. The main terminal block is suitable for use with aluminum or copper wires. Maximum wire size varies according to disconnect size.

Units without Factory-Installed Disconnect — When installing units, provide a disconnect per NEC (National Electrical Code) of adequate size (MOCP [maximum overcurrent protection] of unit is on the informative plate). All field wiring must comply with NEC and all local codes. Size wire based on MCA (minimum circuit amps) on the unit informative plate. See Fig. 41 for power wiring connections to the unit power terminal block and equipment ground. Maximum wire size is two (2) 500 MCM (maximum wire size) conductors per pole.

Units with Factory-Installed Disconnect — The factory-installed disconnect is an interlocking, door-type. The disconnect handle locks the door when it is in the ON position. The disconnect handle must be in the OFF position to open the control box door. The disconnect is located in the control box behind the control box door for all units. See Fig. 42.

All field wiring must comply with NEC and all local codes. Wire must be sized based on MCA (minimum circuit amps) on the unit informative plate. See Fig. 43 for power wiring connections to the unit disconnect and equipment ground.

DISCONNECT SIZE	QUANTITY...MAXIMUM WIRE SIZE (MCM)
250 Amps	1...300
400 Amps	1...600
600 Amps	2...600

Operating Voltage — Operating voltage to the compressor must be within the voltage range indicated on the unit nameplate. Voltages between phases must be balanced within 2%, and the current must be balanced within 10%. See Tables 12-25 for unit electrical data.

Use the following formula to determine the percentage of voltage imbalance.

Voltage Imbalance

$$= 100 \times \frac{\text{max voltage deviation from average voltage}}{\text{average voltage}}$$

Example: Supply voltage is 460-3-60.

AB = 452 v
BC = 464 v
AC = 455 v

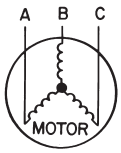

$$\text{Average Voltage} = \frac{455 + 464 + 455}{3} = \frac{1371}{3} = 457$$

Determine maximum deviation from average voltage:

(AB) 457 – 452 = 5 v
(BC) 464 – 457 = 7 v
(AC) 457 – 455 = 2 v

Maximum deviation is 7 v.

Determine percent voltage imbalance:

$$\text{\% Voltage Imbalance} = 100 \times \frac{7}{457} = 1.53\%$$

This amount of phase imbalance is satisfactory as it is below the maximum allowable 2%.

IMPORTANT: If the supply voltage phase imbalance is more than 2%, contact local utility immediately.

Unit failure as a result of operation on improper line voltage or excessive phase imbalance constitutes abuse and may cause damage to electrical components.

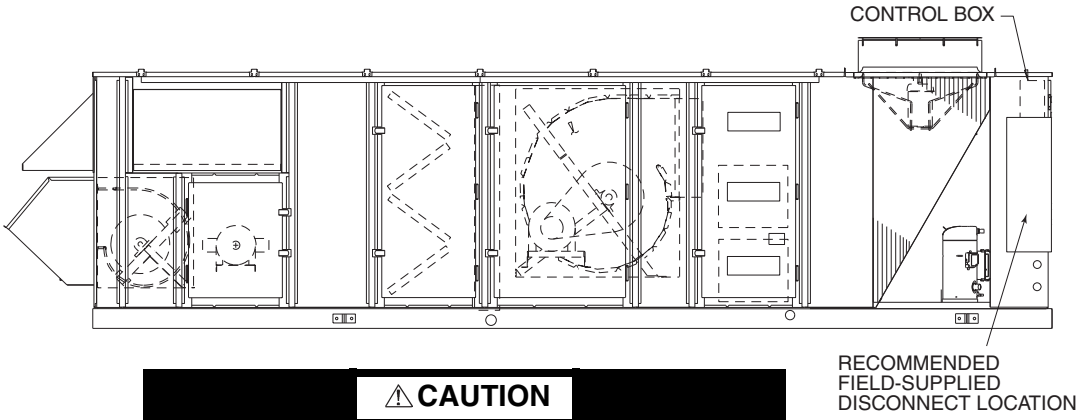

⚠ CAUTION

Use care when drilling into corner post to avoid damage to condenser coil.

Fig. 38 — Disconnect Location — Size 030 and 035 Units

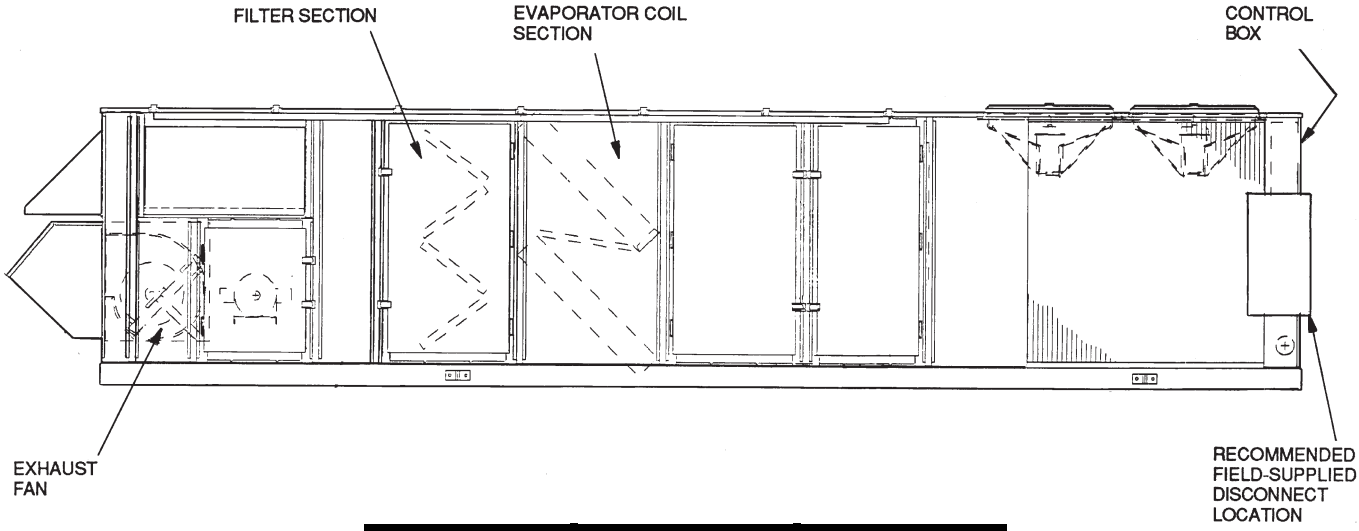

⚠ CAUTION

Use care when drilling into corner post to avoid damage to condenser coil.

Fig. 39 — Disconnect Location — Size 040-060 Units

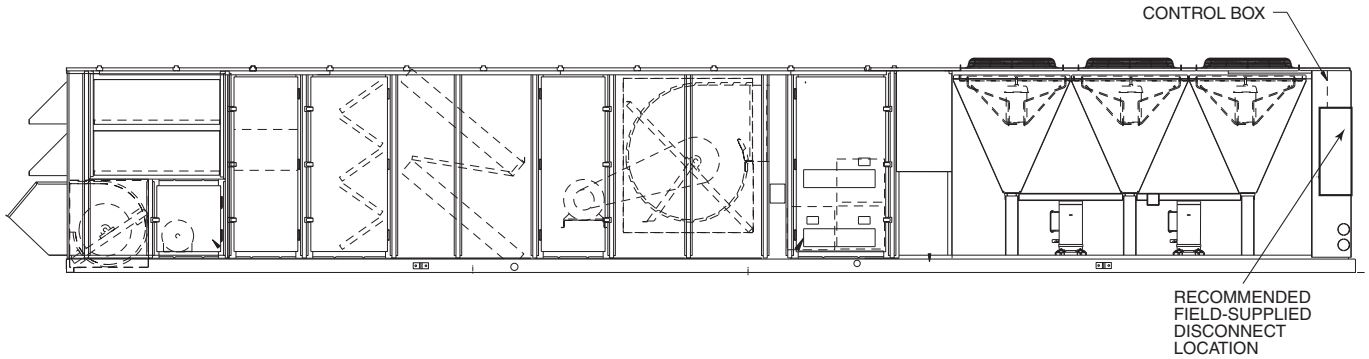

⚠ CAUTION

Use care when drilling into corner post to avoid damage to condenser coil.

Fig. 40 — Disconnect Location — Size 070-100 Units

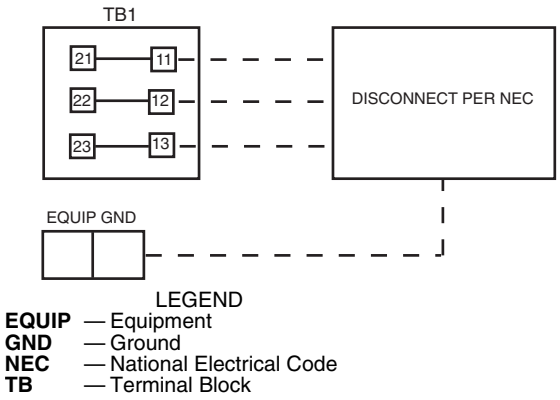

Fig. 41 — Field Power Wiring Connections

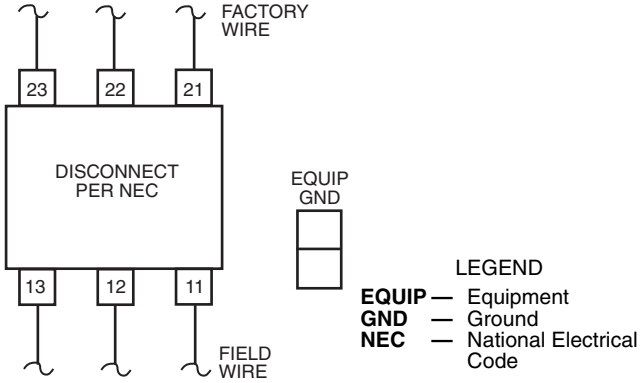

Fig. 43 — Field Power Wiring Connections for Factory-Installed Disconnect

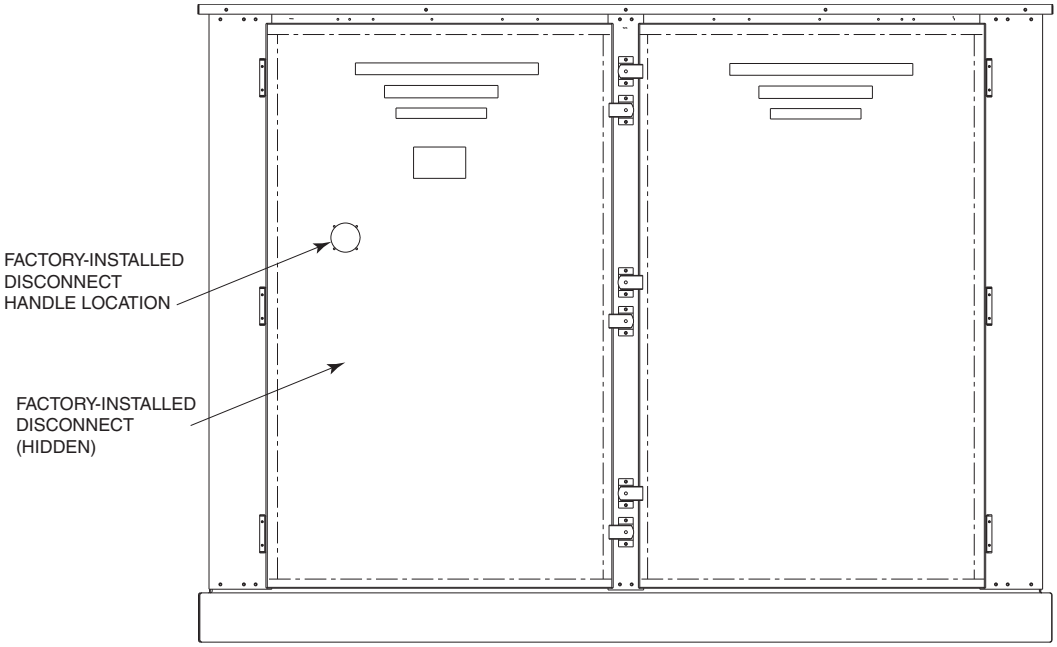

Fig. 42 — Factory-Installed Disconnect Location (End of Unit Shown)

Table 12 — Electrical Data, 48P2,P3,P4,P5030 Units

VOLTAGE 3 PH, 60 Hz	VOLTAGE RANGE		COMPRESSOR No. A1			COMPRESSOR No. B1			CONDENSER FAN MOTOR		EVAPORATORFAN MOTOR		POWER EXHAUST			POWER SUPPLY	
	Min	Max	Qty	RLA (ea)	LRA (ea)	Qty	RLA (ea)	LRA (ea)	Qty	FLA	Hp	FLA	Qty	Hp (ea)	FLA (ea)	MCA	FUSE OR HACR BRKR*
208/230	187	253	1	51.3	300	1	51.3	300	2	6.6 (ea)	7 1/2	24.2 / 22.0	—	—	— / —	152.8/150.6	200/200
													2	3	10.6 / 9.6	174.0/169.8	225/200
													2	5	16.7 / 15.2	186.2/181.0	225/225
													2	7.5	24.2 / 22.0	201.2/194.6	250/225
													2	10	30.8 / 28.0	214.4/206.6	250/250
											10	30.8 / 28.0	—	—	— / —	159.4/156.6	200/200
													2	3	10.6 / 9.6	180.6/175.8	225/225
													2	5	16.7 / 15.2	192.8/187.0	225/225
													2	7.5	24.2 / 22.0	207.8/200.6	250/250
													2	10	30.8 / 28.0	221.0/212.6	250/250
											15	46.2 / 42.0	—	—	— / —	174.8/170.6	225/200
													2	3	10.6 / 9.6	196.0/189.8	225/225
													2	5	16.7 / 15.2	208.2/201.0	250/250
													2	7.5	24.2 / 22.0	223.2/214.6	250/250
													2	10	30.8 / 28.0	236.4/226.6	250/250
											20	59.4 / 54.0	—	—	— / —	190.1/183.3	225/225
													2	3	10.6 / 9.6	211.3/202.5	250/250
													2	5	16.7 / 15.2	223.5/213.7	250/250
													2	7.5	24.2 / 22.0	238.5/227.3	250/250
													2	10	30.8 / 28.0	251.7/239.3	300/250
											25	74.8 / 68.0	—	—	— / —	209.3/200.8	250/250
													2	3	10.6 / 9.6	230.5/220.0	300/250
													2	5	16.7 / 15.2	242.7/231.2	300/250
													2	7.5	24.2 / 22.0	257.7/244.8	300/300
													2	10	30.8 / 28.0	270.9/256.8	300/300
											30	88.0 / 80.0	—	—	— / —	225.8/215.8	300/250
													2	3	10.6 / 9.6	247.0/235.0	300/300
													2	5	16.7 / 15.2	259.2/246.2	300/300
													2	7.5	24.2 / 22.0	274.2/259.8	350/300
													2	10	30.8 / 28.0	287.4/271.8	350/350
460	414	508	1	23.1	150	1	23.1	150	2	3.3 (ea)	7 1/2	11.0	—	—	—	69.6	90
													2	3	4.8	79.2	100
													2	5	7.6	84.8	100
													2	7.5	11.0	91.6	110
													2	10	14.0	97.6	110
											10	14.0	—	—	—	72.6	90
													2	3	4.8	82.2	100
													2	5	7.6	87.8	110
													2	7.5	11.0	94.6	110
													2	10	14.0	100.6	110
											15	21.0	—	—	—	79.6	100
													2	3	4.8	89.2	110
													2	5	7.6	94.8	110
													2	7.5	11.0	101.6	110
													2	10	14.0	107.6	125
											20	27.0	—	—	—	86.6	110
													2	3	4.8	96.2	110
													2	5	7.6	101.8	125
													2	7.5	11.0	108.6	125
													2	10	14.0	114.6	125
											25	34.0	—	—	—	95.3	125
													2	3	4.8	104.9	125
													2	5	7.6	110.5	125
													2	7.5	11.0	117.3	150
													2	10	14.0	123.3	150
											30	40.0	—	—	—	102.8	125
													2	3	4.8	112.4	150
													2	5	7.6	118.0	150
													2	7.5	11.0	124.8	150
													2	10	14.0	130.8	150

Table 12 — Electrical Data, 48P2,P3,P4,P5030 Units (cont)

VOLTAGE 3 PH, 60 Hz	VOLTAGE RANGE		COMPRESSOR						CONDENSER FAN MOTOR		EVAPORATOR FAN MOTOR		POWER EXHAUST			POWER SUPPLY	
			No. A1			No. B1											
	Min	Max	Qty	RLA (ea)	LRA (ea)	Qty	RLA (ea)	LRA (ea)	Qty	FLA	Hp	FLA	Qty	Hp (ea)	FLA (ea)	MCA	FUSE OR HACR BRKR*
575	518	632	1	19.9	109	1	19.9	109	2	2.6 (ea)	7 1/2	9.0	—	—	—	59.0	70
													2	3	3.9	66.8	80
													2	5	6.1	71.2	90
													2	7.5	9.0	77.0	90
													2	10	11.0	81.0	100
											10	11.0	—	—	—	61.0	80
													2	3	3.9	68.8	80
													2	5	6.1	73.2	90
													2	7.5	9.0	79.0	90
													2	10	11.0	83.0	100
											15	17.0	—	—	—	67.0	80
													2	3	3.9	74.8	90
													2	5	6.1	79.2	90
													2	7.5	9.0	85.0	100
													2	10	11.0	89.0	100
											20	22.0	—	—	—	72.5	90
													2	3	3.9	80.3	100
													2	5	6.1	84.7	100
													2	7.5	9.0	90.5	110
													2	10	11.0	94.5	110
											25	27.0	—	—	—	78.8	100
													2	3	3.9	86.6	110
													2	5	6.1	91.0	110
													2	7.5	9.0	96.8	110
													2	10	11.0	100.8	125
											30	32.0	—	—	—	85.0	110
													2	3	3.9	92.8	110
													2	5	6.1	97.2	125
													2	7.5	9.0	103.0	125
													2	10	11.0	107.0	125

LEGEND

FLA — Full Load Amps
HACR — Heating, Air Conditioning, and Refrigeration
Hp — Nominal Horsepower
LRA — Locked Rotor Amps
MCA — Minimum Circuit Amps (for wire sizing)
RLA — Rated Load Amps

* Used to determine minimum disconnect per NEC (National Electrical Code).

NOTE: Units use 1 (low heat) or 2 (high heat) combustion fan motors rated at 0.3 FLA each.

Table 13 — Electrical Data, 48P2,P3,P4,P5035 Units

VOLTAGE	VOLTAGE RANGE		COMPRESSOR						CONDENSER FAN MOTOR		EVAPORATOR FAN MOTOR		POWER EXHAUST			POWER SUPPLY	
			No. A1			No. B1											
3 PH, 60 Hz	Min	Max	Qty	RLA (ea)	LRA (ea)	Qty	RLA (ea)	LRA (ea)	Qty	FLA	Hp	FLA	Qty	Hp (ea)	FLA (ea)	MCA	FUSE OR HACR BRKR*
208/230	187	253	1	55.8	340	1	55.8	340	2	6.6 (ea)	7 1/2	24.2 / 22.0	—	—	— / —	163.0/160.8	200/200
													2	3	10.6 / 9.6	184.2/180.0	225/225
													2	5	16.7 / 15.2	196.4/191.2	250/225
													2	7.5	24.2 / 22.0	211.4/204.8	250/250
													2	10	30.8 / 28.0	224.6/216.8	250/250
											10	30.8 / 28.0	—	—	— / —	169.6/166.8	225/200
													2	3	10.6 / 9.6	190.8/186.0	225/225
													2	5	16.7 / 15.2	203.0/197.2	250/250
													2	7.5	24.2 / 22.0	218.0/210.8	250/250
													2	10	30.8 / 28.0	231.2/222.8	250/250
											15	46.2 / 42.0	—	—	— / —	185.0/180.8	225/225
													2	3	10.6 / 9.6	206.2/200.0	250/250
													2	5	16.7 / 15.2	218.4/211.2	250/250
													2	7.5	24.2 / 22.0	233.4/224.8	250/250
													2	10	30.8 / 28.0	246.6/236.8	300/250
											20	59.4 / 54.0	—	—	— / —	199.1/192.8	250/225
													2	3	10.6 / 9.6	220.3/212.0	250/250
													2	5	16.7 / 15.2	232.5/223.2	250/250
													2	7.5	24.2 / 22.0	247.5/236.8	300/250
													2	10	30.8 / 28.0	260.7/248.8	300/300
											25	74.8 / 68.0	—	—	— / —	218.3/209.8	250/250
													2	3	10.6 / 9.6	239.5/229.0	300/250
													2	5	16.7 / 15.2	251.7/240.2	300/300
													2	7.5	24.2 / 22.0	266.7/253.8	300/300
													2	10	30.8 / 28.0	279.9/265.8	350/300
											30	88.0 / 80.0	—	—	— / —	234.8/224.8	300/300
													2	3	10.6 / 9.6	256.0/244.0	300/300
													2	5	16.7 / 15.2	268.2/255.2	350/300
													2	7.5	24.2 / 22.0	283.2/268.8	350/300
													2	10	30.8 / 28.0	296.4/280.8	350/350
460	414	508	1	26.9	179	1	26.9	179	2	3.3 (ea)	7 1/2	11.0	—	—	—	78.1	100
													2	3	4.8	87.7	110
													2	5	7.6	93.3	110
													2	7.5	11.0	100.1	125
													2	10	14.0	106.1	125
											10	14.0	—	—	—	81.1	100
													2	3	4.8	90.7	110
													2	5	7.6	96.3	110
													2	7.5	11.0	103.1	125
													2	10	14.0	109.1	125
											15	21.0	—	—	—	88.1	110
													2	3	4.8	97.7	110
													2	5	7.6	103.3	125
													2	7.5	11.0	110.1	125
													2	10	14.0	116.1	125
											20	27.0	—	—	—	94.2	110
													2	3	4.8	103.8	125
													2	5	7.6	109.4	125
													2	7.5	11.0	116.2	125
													2	10	14.0	122.2	125
											25	34.0	—	—	—	102.9	125
													2	3	4.8	112.5	125
													2	5	7.6	118.1	150
													2	7.5	11.0	124.9	150
													2	10	14.0	130.9	150
											30	40.0	—	—	—	110.4	150
													2	3	4.8	120.0	150
													2	5	7.6	125.6	150
													2	7.5	11.0	132.4	150
													2	10	14.0	138.4	175

Table 13 — Electrical Data, 48P2,P3,P4,P5035 Units (cont)

VOLTAGE	VOLTAGE RANGE		COMPRESSOR						CONDENSER FAN MOTOR		EVAPORATOR FAN MOTOR		POWER EXHAUST			POWER SUPPLY	
			No. A1			No. B1											
3 PH, 60 Hz	Min	Max	Qty	RLA (ea)	LRA (ea)	Qty	RLA (ea)	LRA (ea)	Qty	FLA	Hp	FLA	Qty	Hp (ea)	FLA (ea)	MCA	FUSE OR HACR BRKR*
575	518	632	1	23.7	132	1	23.7	132	2	2.6 (ea)	7 1/2	9.0	—	—	—	67.5	90
													2	3	3.9	75.3	90
													2	5	6.1	79.7	100
													2	7.5	9.0	85.5	100
													2	10	11.0	89.5	110
											10	11.0	—	—	—	69.5	90
													2	3	3.9	77.3	100
													2	5	6.1	81.7	100
													2	7.5	9.0	87.5	110
													2	10	11.0	91.5	110
											15	17.0	—	—	—	75.5	90
													2	3	3.9	83.3	100
													2	5	6.1	87.7	110
													2	7.5	9.0	93.5	110
													2	10	11.0	97.5	110
											20	22.0	—	—	—	80.5	100
													2	3	3.9	88.3	110
													2	5	6.1	92.7	110
													2	7.5	9.0	98.5	110
													2	10	11.0	102.5	125
											25	27.0	—	—	—	86.4	110
													2	3	3.9	94.2	110
													2	5	6.1	98.6	125
													2	7.5	9.0	104.4	125
													2	10	11.0	108.4	125
											30	32.0	—	—	—	92.6	110
													2	3	3.9	100.4	125
													2	5	6.1	104.8	125
													2	7.5	9.0	110.6	125
													2	10	11.0	114.6	125

LEGEND

FLA — Full Load Amps
HACR — Heating, Air Conditioning, and Refrigeration
Hp — Nominal Horsepower
LRA — Locked Rotor Amps
MCA — Minimum Circuit Amps (for wire sizing)
RLA — Rated Load Amps

* Used to determine minimum disconnect per NEC (National Electrical Code).

NOTE: Units use 1 (low heat) or 2 (high heat) combustion fan motors rated at 0.3 FLA each.

Table 14 — Electrical Data, 48P2,P3,P4,P5040 Units

VOLTAGE	VOLTAGE RANGE		COMPRESSOR						CONDENSER FAN MOTOR		EVAPORATOR FAN MOTOR		POWER EXHAUST			POWER SUPPLY	
			No. A1			No. B1											
3 PH, 60 Hz	Min	Max	Qty	RLA (ea)	LRA (ea)	Qty	RLA (ea)	LRA (ea)	Qty	FLA	Hp	FLA	Qty	Hp (ea)	FLA (ea)	MCA	FUSE OR HACR BRKR*
208/230	187	253	1	55.8	340	2	30.1	225	3	6.6 (ea)	7 1/2	24.2 / 22.0	—	—	— / —	174.0/171.8	225/225
													2	3	10.6 / 9.6	195.2/191.0	250/225
													2	5	16.7 / 15.2	207.4/202.2	250/250
													2	7.5	24.2 / 22.0	222.4/215.8	250/250
													2	10	30.8 / 28.0	235.6/227.8	250/250
											10	30.8 / 28.0	—	—	— / —	180.6/177.8	225/225
													2	3	10.6 / 9.6	201.8/197.0	250/250
													2	5	16.7 / 15.2	214.0/208.2	250/250
													2	7.5	24.2 / 22.0	229.0/221.8	250/250
													2	10	30.8 / 28.0	242.2/233.8	250/250
											15	46.2 / 42.0	—	—	— / —	196.0/191.8	250/225
													2	3	10.6 / 9.6	217.2/211.0	250/250
													2	5	16.7 / 15.2	229.4/222.2	250/250
													2	7.5	24.2 / 22.0	244.4/235.8	300/250
													2	10	30.8 / 28.0	257.6/247.8	300/300
											20	59.4 / 54.0	—	—	— / —	210.1/203.8	250/250
													2	3	10.6 / 9.6	231.3/223.0	250/250
													2	5	16.7 / 15.2	243.5/234.2	300/250
													2	7.5	24.2 / 22.0	258.5/247.8	300/300
													2	10	30.8 / 28.0	271.7/259.8	300/300
											25	74.8 / 68.0	—	—	— / —	229.3/220.8	300/250
													2	3	10.6 / 9.6	250.5/240.0	300/300
													2	5	16.7 / 15.2	262.7/251.2	300/300
													2	7.5	24.2 / 22.0	277.7/264.8	350/300
													2	10	30.8 / 28.0	290.9/276.8	350/300
											30	88.0 / 80.0	—	—	— / —	245.8/235.8	300/300
													2	3	10.6 / 9.6	267.0/255.0	350/300
													2	5	16.7 / 15.2	279.2/266.2	350/300
													2	7.5	24.2 / 22.0	294.2/279.8	350/350
													2	10	30.8 / 28.0	307.4/291.8	350/350
460	414	508	1	26.9	179	2	16.7	114	3	3.3 (ea)	7 1/2	11.0	—	—	—	87.9	110
													2	3	4.8	97.5	110
													2	5	7.6	103.1	125
													2	7.5	11.0	109.9	125
													2	10	14.0	115.9	125
											10	14.0	—	—	—	90.9	110
													2	3	4.8	100.5	125
													2	5	7.6	106.1	125
													2	7.5	11.0	112.9	125
													2	10	14.0	118.9	125
											15	21.0	—	—	—	97.9	110
													2	3	4.8	107.5	125
													2	5	7.6	113.1	125
													2	7.5	11.0	119.9	125
													2	10	14.0	125.9	150
											20	27.0	—	—	—	104.0	125
													2	3	4.8	113.6	125
													2	5	7.6	119.2	125
													2	7.5	11.0	126.0	150
													2	10	14.0	132.0	150
											25	34.0	—	—	—	112.7	125
													2	3	4.8	122.3	150
													2	5	7.6	127.9	150
													2	7.5	11.0	134.7	150
													2	10	14.0	140.7	150
											30	40.0	—	—	—	120.2	150
													2	3	4.8	129.8	150
													2	5	7.6	135.4	175
													2	7.5	11.0	142.2	175
													2	10	14.0	148.2	175

Table 14 — Electrical Data, 48P2,P3,P4,P5040 Units (cont)

VOLTAGE	VOLTAGE RANGE		COMPRESSOR						CONDENSER FAN MOTOR		EVAPORATOR FAN MOTOR		POWER EXHAUST			POWER SUPPLY	
			No. A1			No. B1											
3 PH, 60 Hz	Min	Max	Qty	RLA (ea)	LRA (ea)	Qty	RLA (ea)	LRA (ea)	Qty	FLA	Hp	FLA	Qty	Hp (ea)	FLA (ea)	MCA	FUSE OR HACR BRKR*
575	518	632	1	23.7	132	2	12.2	80	3	2.6 (ea)	7 1/2	9.0	—	—	—	70.8	90
													2	3	3.9	78.6	100
													2	5	6.1	83.0	100
													2	7.5	9.0	88.8	110
													2	10	11.0	92.8	110
											10	11.0	—	—	—	72.8	90
													2	3	3.9	80.6	100
													2	5	6.1	85.0	100
													2	7.5	9.0	90.8	110
													2	10	11.0	94.8	110
											15	17.0	—	—	—	78.8	100
													2	3	3.9	86.6	110
													2	5	6.1	91.0	110
													2	7.5	9.0	96.8	110
													2	10	11.0	100.8	110
											20	22.0	—	—	—	83.8	100
													2	3	3.9	91.6	110
													2	5	6.1	96.0	110
													2	7.5	9.0	101.8	125
													2	10	11.0	105.8	125
											25	27.0	—	—	—	89.7	110
													2	3	3.9	97.5	110
													2	5	6.1	101.9	125
													2	7.5	9.0	107.7	125
													2	10	11.0	111.7	125
											30	32.0	—	—	—	95.9	125
													2	3	3.9	103.7	125
													2	5	6.1	108.1	125
													2	7.5	9.0	113.9	125
													2	10	11.0	117.9	125

LEGEND

FLA — Full Load Amps
HACR — Heating, Air Conditioning, and Refrigeration
Hp — Nominal Horsepower
LRA — Locked Rotor Amps
MCA — Minimum Circuit Amps (for wire sizing)
RLA — Rated Load Amps

* Used to determine minimum disconnect per NEC (National Electrical Code).

NOTE: Units use 1 (low heat) or 2 (high heat) combustion fan motors rated at 0.3 FLA each.

Table 15 — Electrical Data, 48P2,P3,P4,P5050 Units

VOLTAGE	VOLTAGE RANGE		COMPRESSOR						CONDENSER FAN MOTOR		EVAPORATOR FAN MOTOR		POWER EXHAUST			POWER SUPPLY	
			No. A1			No. B1											
3 PH, 60 Hz	Min	Max	Qty	RLA (ea)	LRA (ea)	Qty	RLA (ea)	LRA (ea)	Qty	FLA	Hp	FLA	Qty	Hp (ea)	FLA (ea)	MCA	FUSE OR HACR BRKR*
208/230	187	253	2	33.3	239	2	48.1	245	4	6.6 (ea)	7 1/2	24.2 / 22.0	—	—	— / —	225.4/223.2	250/250
													2	3	10.6 / 9.6	246.6/242.4	250/250
													2	5	16.7 / 15.2	258.8/253.6	300/300
													2	7.5	24.2 / 22.0	273.8/267.2	300/300
													2	10	30.8 / 28.0	287.0/279.2	300/300
											10	30.8 / 28.0	—	—	— / —	232.0/229.2	250/250
													2	3	10.6 / 9.6	253.2/248.4	300/250
													2	5	16.7 / 15.2	265.4/259.6	300/300
													2	7.5	24.2 / 22.0	280.4/273.2	300/300
													2	10	30.8 / 28.0	293.6/285.2	300/300
											15	46.2 / 42.0	—	—	— / —	247.4/243.2	250/250
													2	3	10.6 / 9.6	268.6/262.4	300/300
													2	5	16.7 / 15.2	280.8/273.6	300/300
													2	7.5	24.2 / 22.0	295.8/287.2	300/300
													2	10	30.8 / 28.0	309.0/299.2	350/300
											20	59.4 / 54.0	—	—	— / —	263.5/256.7	300/300
													2	3	10.6 / 9.6	284.7/275.9	300/300
													2	5	16.7 / 15.2	296.9/287.1	350/300
													2	7.5	24.2 / 22.0	311.9/300.7	350/350
													2	10	30.8 / 28.0	325.1/312.7	350/350
											25	74.8 / 68.0	—	—	— / —	282.7/274.2	350/300
													2	3	10.6 / 9.6	303.9/293.4	350/350
													2	5	16.7 / 15.2	316.1/304.6	350/350
													2	7.5	24.2 / 22.0	331.1/318.2	400/350
													2	10	30.8 / 28.0	344.3/330.2	400/350
											30	88.0 / 80.0	—	—	— / —	299.2/289.2	350/350
													2	3	10.6 / 9.6	320.4/308.4	400/350
													2	5	16.7 / 15.2	332.6/319.6	400/350
													2	7.5	24.2 / 22.0	347.6/333.2	400/400
													2	10	30.8 / 28.0	360.8/345.2	400/400
460	414	508	2	17.9	125	2	18.6	125	4	3.3 (ea)	7 1/2	11.0	—	—	—	101.9	110
													2	3	4.8	111.5	125
													2	5	7.6	117.1	125
													2	7.5	11.0	123.9	125
													2	10	14.0	129.9	150
											10	14.0	—	—	—	104.9	110
													2	3	4.8	114.5	125
													2	5	7.6	120.1	125
													2	7.5	11.0	126.9	150
													2	10	14.0	132.9	150
											15	21.0	—	—	—	112.5	125
													2	3	4.8	122.1	125
													2	5	7.6	127.7	150
													2	7.5	11.0	134.5	150
													2	10	14.0	140.5	150
											20	27.0	—	—	—	120.0	125
													2	3	4.8	129.6	150
													2	5	7.6	135.2	150
													2	7.5	11.0	142.0	150
													2	10	14.0	148.0	150
											25	34.0	—	—	—	128.7	150
													2	3	4.8	138.3	150
													2	5	7.6	143.9	175
													2	7.5	11.0	150.7	175
													2	10	14.0	156.7	175
											30	40.0	—	—	—	136.2	175
													2	3	4.8	145.8	175
													2	5	7.6	151.4	175
													2	7.5	11.0	158.2	175
													2	10	14.0	164.2	200

Table 15 — Electrical Data, 48P2,P3,P4,P5050 Units (cont)

VOLTAGE	VOLTAGE RANGE		COMPRESSOR						CONDENSER FAN MOTOR		EVAPORATOR FAN MOTOR		POWER EXHAUST			POWER SUPPLY	
			No. A1			No. B1											
3 PH, 60 Hz	Min	Max	Qty	RLA (ea)	LRA (ea)	Qty	RLA (ea)	LRA (ea)	Qty	FLA	Hp	FLA	Qty	Hp (ea)	FLA (ea)	MCA	FUSE OR HACR BRKR*
575	518	632	2	12.8	80	2	14.7	100	4	2.6 (ea)	7 1/2	9.0	—	—	—	78.1	90
													2	3	3.9	85.9	100
													2	5	6.1	90.3	100
													2	7.5	9.0	96.1	110
													2	10	11.0	100.1	110
											10	11.0	—	—	—	80.1	90
													2	3	3.9	87.9	100
													2	5	6.1	92.3	100
													2	7.5	9.0	98.1	110
													2	10	11.0	102.1	110
											15	17.0	—	—	—	86.7	100
													2	3	3.9	94.5	110
													2	5	6.1	98.9	110
													2	7.5	9.0	104.7	110
													2	10	11.0	108.7	125
											20	22.0	—	—	—	92.9	110
													2	3	3.9	100.7	110
													2	5	6.1	105.1	125
													2	7.5	9.0	110.9	125
													2	10	11.0	114.9	125
											25	27.0	—	—	—	99.2	125
													2	3	3.9	107.0	125
													2	5	6.1	111.4	125
													2	7.5	9.0	117.2	125
													2	10	11.0	121.2	125
											30	32.0	—	—	—	105.4	125
													2	3	3.9	113.2	125
													2	5	6.1	117.6	125
													2	7.5	9.0	123.4	150
													2	10	11.0	127.4	150

LEGEND

FLA — Full Load Amps
HACR — Heating, Air Conditioning, and Refrigeration
Hp — Nominal Horsepower
LRA — Locked Rotor Amps
MCA — Minimum Circuit Amps (for wire sizing)
RLA — Rated Load Amps

* Used to determine minimum disconnect per NEC (National Electrical Code).

NOTE: Units use 1 (low heat) or 2 (high heat) combustion fan motors rated at 0.3 FLA each.

Table 16 — Electrical Data, 48P2,P3,P4,P5055 Units

VOLTAGE	VOLTAGE RANGE		COMPRESSOR						CONDENSER FAN MOTOR		EVAPORATOR FAN MOTOR		POWER EXHAUST			POWER SUPPLY	
			No. A1			No. B1											
3 PH, 60 Hz	Min	Max	Qty	RLA (ea)	LRA (ea)	Qty	RLA (ea)	LRA (ea)	Qty	FLA	Hp	FLA	Qty	Hp (ea)	FLA (ea)	MCA	FUSE OR HACR BRKR*
208/230	187	253	2	48.1	245	2	48.1	245	4	6.6 (ea)	15	46.2/42.0	—	—	— / —	277.0/272.8	300/300
													2	5.0	16.7 / 15.2	310.4/303.2	350/350
													2	7.5	24.2 / 22.0	325.4/316.8	350/350
													2	10.0	30.8 / 28.0	338.6/328.8	350/350
											20	59.4/54.0	—	—	— / —	293.1/286.3	350/300
													2	5.0	16.7 / 15.2	326.5/316.7	350/350
													2	7.5	24.2 / 22.0	341.5/330.3	400/350
													2	10.0	30.8 / 28.0	354.7/342.3	400/350
											25	74.8/68.0	—	—	— / —	312.3/303.8	350/350
													2	5.0	16.7 / 15.2	345.7/334.2	400/400
													2	7.5	24.2 / 22.0	360.7/347.8	400/400
													2	10.0	30.8 / 28.0	373.9/359.8	400/400
											30	88.0/80.0	—	—	— / —	328.8/318.8	400/350
													2	5.0	16.7 / 15.2	362.2/349.2	450/400
													2	7.5	24.2 / 22.0	377.2/362.8	450/400
													2	10.0	30.8 / 28.0	390.4/374.8	450/450
											40	114.0/104.0	—	—	— / —	361.3/348.8	450/450
													2	5.0	16.7 / 15.2	394.7/379.2	500/450
													2	7.5	24.2 / 22.0	409.7/392.8	500/450
													2	10.0	30.8 / 28.0	422.9/404.8	500/500
460	414	508	2	18.6	125	2	18.6	125	4	3.3 (ea)	15	21.0	—	—	—	113.9	125
													2	5.0	7.6	129.1	150
													2	7.5	11.0	135.9	150
													2	10.0	14.0	141.9	150
											20	27.0	—	—	—	121.4	125
													2	5.0	7.6	136.6	150
													2	7.5	11.0	143.4	150
													2	10.0	14.0	149.4	175
											25	34.0	—	—	—	130.1	150
													2	5.0	7.6	145.3	175
													2	7.5	11.0	152.1	175
													2	10.0	14.0	158.1	175
											30	40.0	—	—	—	137.6	175
													2	5.0	7.6	152.8	175
													2	7.5	11.0	159.6	175
													2	10.0	14.0	165.6	200
											40	52.0	—	—	—	152.6	200
													2	5.0	7.6	167.8	200
													2	7.5	11.0	174.6	225
													2	10.0	14.0	180.6	225
575	518	632	2	14.7	100	2	14.7	100	4	2.6 (ea)	15	17.0	—	—	—	90.5	100
													2	5.0	6.1	102.7	110
													2	7.5	9.0	108.5	125
													2	10.0	11.0	112.5	125
											20	22.0	—	—	—	96.7	110
													2	5.0	6.1	108.9	125
													2	7.5	9.0	114.7	125
													2	10.0	11.0	118.7	125
											25	27.0	—	—	—	103.0	125
													2	5.0	6.1	115.2	125
													2	7.5	9.0	121.0	125
													2	10.0	11.0	125.0	150
											30	32.0	—	—	—	109.2	125
													2	5.0	6.1	121.4	150
													2	7.5	9.0	127.2	150
													2	10.0	11.0	131.2	150
											40	41.0	—	—	—	120.5	150
													2	5.0	6.1	132.7	150
													2	7.5	9.0	138.5	175
													2	10.0	11.0	142.5	175

LEGEND

FLA — Full Load Amps
HACR — Heating, Air Conditioning, and Refrigeration
Hp — Nominal Horsepower
LRA — Locked Rotor Amps
MCA — Minimum Circuit Amps (for wire sizing)
RLA — Rated Load Amps

* Used to determine minimum disconnect per NEC (National Electrical Code).

NOTE: Units use 2 (low heat) or 3 (high heat) combustion fan motors rated at 0.3 FLA each.

Table 17 — Electrical Data, 48P2,P3,P4,P5060 Units

VOLTAGE	VOLTAGE RANGE		COMPRESSOR						CONDENSER FAN MOTOR		EVAPORATOR FAN MOTOR		POWER EXHAUST			POWER SUPPLY	
			No. A1			No. B1											
3 PH, 60 Hz	Min	Max	Qty	RLA (ea)	LRA (ea)	Qty	RLA (ea)	LRA (ea)	Qty	FLA	Hp	FLA	Qty	Hp (ea)	FLA (ea)	MCA	FUSE OR HACR BRKR*
208/230	187	253	2	51.3	300	2	51.3	300	4	6.6 (ea)	15	46.2/42.0	—	—	— / —	290.6/286.4	300/300
													2	5.0	16.7 / 15.2	324.0/316.8	350/350
													2	7.5	24.2 / 22.0	339.0/330.4	350/350
													2	10.0	30.8 / 28.0	352.2/342.4	400/350
											20	59.4/54.0	—	—	— / —	305.9/299.1	350/350
													2	5.0	16.7 / 15.2	339.3/329.5	350/350
													2	7.5	24.2 / 22.0	354.3/343.1	400/350
													2	10.0	30.8 / 28.0	367.5/355.1	400/400
											25	74.8/68.0	—	—	— / —	325.1/316.6	350/350
													2	5.0	16.7 / 15.2	358.5/347.0	400/400
													2	7.5	24.2 / 22.0	373.5/360.6	400/400
													2	10.0	30.8 / 28.0	386.7/372.6	450/400
											30	88.0/80.0	—	—	— / —	341.6/331.6	400/400
													2	5.0	16.7 / 15.2	375.0/362.0	450/400
													2	7.5	24.2 / 22.0	390.0/375.6	450/450
													2	10.0	30.8 / 28.0	403.2/387.6	450/450
											40	114.0/104.0	—	—	— / —	374.1/361.6	450/450
													2	5.0	16.7 / 15.2	407.5/392.0	500/450
													2	7.5	24.2 / 22.0	422.5/405.6	500/500
													2	10.0	30.8 / 28.0	435.7/417.6	500/500
460	414	508	2	23.1	150	2	23.1	150	4	3.3 (ea)	15	21.0	—	—	—	132.4	150
													2	5.0	7.6	147.6	150
													2	7.5	11.0	154.4	175
													2	10.0	14.0	160.4	175
											20	27.0	—	—	—	139.4	150
													2	5.0	7.6	154.6	175
													2	7.5	11.0	161.4	175
													2	10.0	14.0	167.4	175
											25	34.0	—	—	—	148.1	175
													2	5.0	7.6	163.3	175
													2	7.5	11.0	170.1	200
													2	10.0	14.0	176.1	200
											30	40.0	—	—	—	155.6	175
													2	5.0	7.6	170.8	200
													2	7.5	11.0	177.6	200
													2	10.0	14.0	183.6	200
											40	52.0	—	—	—	170.6	200
													2	5.0	7.6	185.8	225
													2	7.5	11.0	192.6	225
													2	10.0	14.0	198.6	250
575	518	632	2	19.9	109	2	19.9	109	4	2.6 (ea)	15	17.0	—	—	—	112.0	125
													2	5.0	6.1	124.2	125
													2	7.5	9.0	130.0	150
													2	10.0	11.0	134.0	150
											20	22.0	—	—	—	117.5	125
													2	5.0	6.1	129.7	150
													2	7.5	9.0	135.5	150
													2	10.0	11.0	139.5	150
											25	27.0	—	—	—	123.8	150
													2	5.0	6.1	136.0	150
													2	7.5	9.0	141.8	150
													2	10.0	11.0	145.8	150
											30	32.0	—	—	—	130.0	150
													2	5.0	6.1	142.2	150
													2	7.5	9.0	148.0	175
													2	10.0	11.0	152.0	175
											40	41.0	—	—	—	141.3	175
													2	5.0	6.1	153.5	175
													2	7.5	9.0	159.3	200
													2	10.0	11.0	163.3	200

LEGEND

FLA — Full Load Amps
HACR — Heating, Air Conditioning, and Refrigeration
Hp — Nominal Horsepower
LRA — Locked Rotor Amps
MCA — Minimum Circuit Amps (for wire sizing)
RLA — Rated Load Amps

* Used to determine minimum disconnect per NEC (National Electrical Code).

NOTE: Units use 2 (low heat) or 3 (high heat) combustion fan motors rated at 0.3 FLA each.

Table 18 — Electrical Data, 48P2,P3,P4,P5070 Units

VOLTAGE	VOLTAGE RANGE		COMPRESSOR						CONDENSER FAN MOTOR		EVAPORATOR FAN MOTOR		POWER EXHAUST			POWER SUPPLY	
			No. A1			No. B1											
3 PH, 60 Hz	Min	Max	Qty	RLA (ea)	LRA (ea)	Qty	RLA (ea)	LRA (ea)	Qty	FLA	Hp	FLA	Qty	Hp (ea)	FLA (ea)	MCA	FUSE OR HACR BRKR*
208/230	187	253	2	51.3	300	2	55.8	340	4	6.6 (ea)	15	46.2/42.0	—	—	— / —	300.8/ 296.6	350/350
													2	5.0	16.7 / 15.2	334.2/ 327.0	350/350
													2	7.5	24.2 / 22.0	349.2/ 340.6	400/350
													2	10.0	30.8 / 28.0	362.4/ 352.6	400/400
											20	59.4/54.0	—	—	— / —	314.9/ 308.6	350/350
													2	5.0	16.7 / 15.2	348.3/ 339.0	400/350
													2	7.5	24.2 / 22.0	363.3/ 352.6	400/400
													2	10.0	30.8 / 28.0	376.5/ 364.6	400/400
											25	74.8/68.0	—	—	— / —	334.1/ 325.6	400/350
													2	5.0	16.7 / 15.2	367.5/ 356.0	400/400
													2	7.5	24.2 / 22.0	382.5/ 369.6	450/400
													2	10.0	30.8 / 28.0	395.7/ 381.6	450/400
											30	88.0/80.0	—	—	— / —	350.6/ 340.6	400/400
													2	5.0	16.7 / 15.2	384.0/ 371.0	450/450
													2	7.5	24.2 / 22.0	399.0/ 384.6	450/450
													2	10.0	30.8 / 28.0	412.2/ 396.6	500/450
											40	114.0/104.0	—	—	— / —	383.1/ 370.6	450/450
													2	5.0	16.7 / 15.2	416.5/ 401.0	500/500
													2	7.5	24.2 / 22.0	431.5/ 414.6	500/500
													2	10.0	30.8 / 28.0	444.7/ 426.6	500/500
460	414	508	2	23.1	150	2	26.9	179	4	3.3 (ea)	15	21.0	—	—	—	140.9	150
													2	5.0	7.6	156.1	175
													2	7.5	11.0	162.9	175
													2	10.0	14.0	168.9	175
											20	27.0	—	—	—	147.0	150
													2	5.0	7.6	162.2	175
													2	7.5	11.0	169.0	175
													2	10.0	14.0	175.0	200
											25	34.0	—	—	—	155.7	175
													2	5.0	7.6	170.9	200
													2	7.5	11.0	177.7	200
													2	10.0	14.0	183.7	200
											30	40.0	—	—	—	163.2	200
													2	5.0	7.6	178.4	200
													2	7.5	11.0	185.2	225
													2	10.0	14.0	191.2	225
											40	52.0	—	—	—	178.2	225
													2	5.0	7.6	193.4	225
													2	7.5	11.0	200.2	250
													2	10.0	14.0	206.2	250
575	518	632	2	19.9	109	2	23.7	132	4	2.6 (ea)	15	17.0	—	—	—	120.5	125
													2	5.0	6.1	132.7	150
													2	7.5	9.0	138.5	150
													2	10.0	11.0	142.5	150
											20	22.0	—	—	—	125.5	150
													2	5.0	6.1	137.7	150
													2	7.5	9.0	143.5	150
													2	10.0	11.0	147.5	150
											25	27.0	—	—	—	131.4	150
													2	5.0	6.1	143.6	150
													2	7.5	9.0	149.4	175
													2	10.0	11.0	153.4	175
											30	32.0	—	—	—	137.6	150
													2	5.0	6.1	149.8	175
													2	7.5	9.0	155.6	175
													2	10.0	11.0	159.6	175
											40	41.0	—	—	—	148.9	175
													2	5.0	6.1	161.1	200
													2	7.5	9.0	166.9	200
													2	10.0	11.0	170.9	200

LEGEND

FLA — Full Load Amps
HACR — Heating, Air Conditioning, and Refrigeration
Hp — Nominal Horsepower
LRA — Locked Rotor Amps
MCA — Minimum Circuit Amps (for wire sizing)
RLA — Rated Load Amps

* Used to determine minimum disconnect per NEC (National Electrical Code).

NOTE: Units use 2 (low heat) or 3 (high heat) combustion fan motors rated at 0.3 FLA each.

Table 19 — Electrical Data — 48P2,P3,P4,P5075 Standard Units

VOLTAGE	VOLTAGE RANGE		COMPRESSOR						CONDENSER FAN MOTOR		EVAPORATOR FAN MOTOR		POWER EXHAUST			POWER SUPPLY	
			No. A1,A2			No. B1,B2											
3 PH, 60 Hz	Min	Max	Qty	RLA (ea)	LRA (ea)	Qty	RLA (ea)	LRA (ea)	Qty	FLA	Hp	FLA	Qty	Hp (ea)	FLA (ea)	MCA	FUSE OR HACR BRKR*
460	414	508	2	26.9	179	2	26.9	179	4	3.3 (ea)	30	40.0	—	—	—	170.8	200
													2	5.0	7.6	186.0	225
													2	7.5	11.0	192.8	225
													2	10.0	14.0	198.8	225
											40	52.0	—	—	—	185.8	225
													2	5.0	7.6	201.0	250
													2	7.5	11.0	207.8	250
													2	10.0	14.0	213.8	250
											50	65.0	—	—	—	202.1	250
													2	5.0	7.6	217.3	250
													2	7.5	11.0	224.1	250
													2	10.0	14.0	230.1	250
											60	77.0	—	—	—	217.1	250
													2	5.0	7.6	232.3	300
													2	7.5	11.0	239.1	300
													2	10.0	14.0	245.1	300
											75	96.0	—	—	—	240.8	300
													2	5.0	7.6	256.0	350
													2	7.5	11.0	262.8	350
													2	10.0	14.0	268.8	350
575	518	632	2	23.7	132	2	23.7	132	4	2.6 (ea)	30	32.0	—	—	—	145.2	175
													2	5.0	6.1	157.4	175
													2	7.5	9.0	163.2	175
													2	10.0	11.0	167.2	175
											40	41.0	—	—	—	156.5	175
													2	5.0	6.1	168.7	200
													2	7.5	9.0	174.5	200
													2	10.0	11.0	178.5	200
											50	52.0	—	—	—	170.2	200
													2	5.0	6.1	182.4	225
													2	7.5	9.0	188.2	225
													2	10.0	11.0	192.2	225
											60	62.0	—	—	—	182.7	225
													2	5.0	6.1	194.9	250
													2	7.5	9.0	200.7	250
													2	10.0	11.0	204.7	250
											75	77.0	—	—	—	201.5	250
													2	5.0	6.1	213.7	250
													2	7.5	9.0	219.5	250
													2	10.0	11.0	223.5	300

LEGEND

FLA — Full Load Amps
HACR — Heating, Air Conditioning, and Refrigeration
Hp — Nominal Horsepower
LRA — Locked Rotor Amps
MCA — Minimum Circuit Amps (for wire sizing)
RLA — Rated Load Amps

* Used to determine minimum disconnect per NEC (National Electrical Code).

NOTE: Units use 2 (low heat) or 3 (high heat) combustion fan motors rated at 0.3 FLA each.

Table 20 — Electrical Data — 48P2,P3,P4,P5075 Units with Optional High-Capacity Power Exhaust

VOLTAGE	VOLTAGE RANGE		COMPRESSOR						CONDENSER FAN MOTOR		EVAPORATOR FAN MOTOR		POWER EXHAUST			POWER SUPPLY	
			No. A1,A2			No. B1,B2											
3 PH, 60 Hz	Min	Max	Qty	RLA (ea)	LRA (ea)	Qty	RLA (ea)	LRA (ea)	Qty	FLA	Hp	FLA	Qty	Hp (ea)	FLA (ea)	MCA	FUSE OR HACR BRKR*
460	414	508	2	26.9	179	2	26.9	179	4	3.3 (ea)	30	40.0	2	10	14.0	198.8	225
													2	15	21.0	212.8	250
													2	20	27.0	224.8	250
													2	25	34.0	238.8	250
													2	30	40.0	250.8	300
											40	52.0	2	10	14.0	213.8	250
													2	15	21.0	227.8	250
													2	20	27.0	239.8	250
													2	25	34.0	253.8	300
													2	30	40.0	265.8	300
											50	65.0	2	10	14.0	230.1	250
													2	15	21.0	244.1	300
													2	20	27.0	256.1	300
													2	25	34.0	270.1	300
													2	30	40.0	282.1	300
											60	77.0	2	10	14.0	245.1	300
													2	15	21.0	259.1	300
													2	20	27.0	271.1	300
													2	25	34.0	285.1	350
													2	30	40.0	297.1	350
											75	96.0	2	10	14.0	268.8	350
													2	15	21.0	282.8	350
													2	20	27.0	294.8	350
													2	25	34.0	308.8	400
													2	30	40.0	320.8	400
575	518	632	2	23.7	132	2	23.7	132	4	2.6 (ea)	30	32.0	2	10	11.0	167.2	175
													2	15	17.0	179.2	200
													2	20	22.0	189.2	200
													2	25	27.0	199.2	225
													2	30	32.0	209.2	225
											40	41.0	2	10	11.0	178.5	200
													2	15	17.0	190.5	225
													2	20	22.0	200.5	225
													2	25	27.0	210.5	250
													2	30	32.0	220.5	250
											50	52.0	2	10	11.0	192.2	225
													2	15	17.0	204.2	250
													2	20	22.0	214.2	250
													2	25	27.0	224.2	250
													2	30	32.0	234.2	250
											60	62.0	2	10	11.0	204.7	250
													2	15	17.0	216.7	250
													2	20	22.0	226.7	250
													2	25	27.0	236.7	250
													2	30	32.0	246.7	300
											75	77.0	2	10	11.0	223.5	300
													2	15	17.0	235.5	300
													2	20	22.0	245.5	300
													2	25	27.0	255.5	300
													2	30	32.0	265.5	300

LEGEND

FLA — Full Load Amps
HACR — Heating, Air Conditioning, and Refrigeration
Hp — Nominal Horsepower
LRA — Locked Rotor Amps
MCA — Minimum Circuit Amps (for wire sizing)
RLA — Rated Load Amps

* Used to determine minimum disconnect per NEC (National Electrical Code).

NOTE: Units use 2 (low heat) or 3 (high heat) combustion fan motors rated at 0.3 FLA each.

Table 21 — Electrical Data — 48P2,P3,P4,P5075 Units with Optional Return Fan

VOLTAGE	VOLTAGE RANGE		COMPRESSOR						CONDENSER FAN MOTOR		EVAPORATOR FAN MOTOR		POWER EXHAUST			POWER SUPPLY	
			No. A1			No. B1											
3 PH, 60 Hz	Min	Max	Qty	RLA (ea)	LRA (ea)	Qty	RLA (ea)	LRA (ea)	Qty	FLA	Hp	FLA	Qty	Hp (ea)	FLA (ea)	MCA	FUSE OR HACR BRKR*
460	414	508	2	26.9	179	2	26.9	179	4	3.3 (ea)	30	40.0	1	20	27.0	197.8	225
													1	25	34.0	204.8	225
													1	30	40.0	210.8	250
													1	40	52.0	225.8	250
											40	52.0	1	20	27.0	212.8	250
													1	25	34.0	219.8	250
													1	30	40.0	225.8	250
													1	40	52.0	237.8	250
											50	65.0	1	20	27.0	229.1	250
													1	25	34.0	236.1	300
													1	30	40.0	242.1	300
													1	40	52.0	254.1	300
											60	77.0	1	20	27.0	244.1	300
													1	25	34.0	251.1	300
													1	30	40.0	257.1	300
													1	40	52.0	269.1	300
											75	96.0	1	20	27.0	267.8	350
													1	25	34.0	274.8	350
													1	30	40.0	280.8	350
													1	40	52.0	292.8	350
575	518	632	2	23.7	132	2	23.7	132	4	2.6 (ea)	30	32.0	1	20	22.0	167.2	175
													1	25	27.0	172.2	200
													1	30	32.0	177.2	200
													1	40	41.0	188.5	225
											40	41.0	1	20	22.0	178.5	200
													1	25	27.0	183.5	200
													1	30	32.0	188.5	225
													1	40	41.0	197.5	225
											50	52.0	1	20	22.0	192.2	225
													1	25	27.0	197.2	225
													1	30	32.0	202.2	250
													1	40	41.0	211.2	250
											60	62.0	1	20	22.0	204.7	250
													1	25	27.0	209.7	250
													1	30	32.0	214.7	250
													1	40	41.0	223.7	250
											75	77.0	1	20	22.0	223.5	300
													1	25	27.0	228.5	300
													1	30	32.0	233.5	300
													1	40	41.0	242.5	300

LEGEND

FLA — Full Load Amps
HACR — Heating, Air Conditioning, and Refrigeration
Hp — Nominal Horsepower
LRA — Locked Rotor Amps
MCA — Minimum Circuit Amps (for wire sizing)
RLA — Rated Load Amps

* Used to determine minimum disconnect per NEC (National Electrical Code).

NOTE: Units use 2 (low heat) or 3 (high heat) combustion fan motors rated at 0.3 FLA each.

Table 22 — Electrical Data — 48P2,P3,P4,P5090 Standard Units

VOLTAGE	VOLTAGE RANGE		COMPRESSOR						CONDENSER FAN MOTOR		EVAPORATOR FAN MOTOR		POWER EXHAUST			POWER SUPPLY	
			No. A1			No. B1											
3 PH, 60 Hz	Min	Max	Qty	RLA (ea)	LRA (ea)	Qty	RLA (ea)	LRA (ea)	Qty	FLA	Hp	FLA	Qty	Hp (ea)	FLA (ea)	MCA	FUSE OR HACR BRKR*
460	414	508	3	23.1	150	3	23.1	150	6	3.3 (ea)	30	40.0	—	—	—	208.4	225
													2	5	7.6	223.6	250
													2	7.5	11.0	230.4	250
													2	10.0	14.0	236.4	250
											40	52.0	—	—	—	223.4	250
													2	5	7.6	238.6	250
													2	7.5	11.0	245.4	250
													2	10	14.0	251.4	300
											50	65.0	—	—	—	239.7	300
													2	5	7.6	254.9	300
													2	7.5	11.0	261.7	300
													2	10	14.0	267.7	300
											60	77.0	—	—	—	254.7	300
													2	5	7.6	269.9	300
													2	7.5	11.0	276.7	350
													2	10	14.0	282.7	350
											75	96.0	—	—	—	278.4	350
													2	5	7.6	293.6	350
													2	7.5	11.0	300.4	350
													2	10	14.0	306.4	400
575	518	632	3	19.9	109	3	19.9	109	6	2.6 (ea)	30	32.0	—	—	—	175.0	200
													2	5	6.1	187.2	200
													2	7.5	9.0	193.0	200
													2	10.0	11.0	197.0	225
											40	41.0	—	—	—	186.3	225
													2	5	6.1	198.5	225
													2	7.5	9.0	204.3	225
													2	10	11.0	208.3	225
											50	52.0	—	—	—	200.0	250
													2	5	6.1	212.2	250
													2	7.5	9.0	218.0	250
													2	10	11.0	222.0	250
											60	62.0	—	—	—	212.5	250
													2	5	6.1	224.7	250
													2	7.5	9.0	230.5	250
													2	10	11.0	234.5	250
											75	77.0	—	—	—	231.3	300
													2	5	6.1	243.5	300
													2	7.5	9.0	249.3	300
													2	10	11.0	253.3	300

LEGEND

FLA — Full Load Amps
HACR — Heating, Air Conditioning, and Refrigeration
Hp — Nominal Horsepower
LRA — Locked Rotor Amps
MCA — Minimum Circuit Amps (for wire sizing)
RLA — Rated Load Amps

* Used to determine minimum disconnect per NEC (National Electrical Code).

NOTE: Units use 2 (low heat) or 3 (high heat) combustion fan motors rated at 0.3 FLA each.

Table 23 — Electrical Data — 48P2,P3,P4,P5090 Units with Optional High-Capacity Power Exhaust

VOLTAGE	VOLTAGE RANGE		COMPRESSOR						CONDENSER FAN MOTOR		EVAPORATOR FAN MOTOR		POWER EXHAUST			POWER SUPPLY	
			No. A1			No. B1											
3 PH, 60 Hz	Min	Max	Qty	RLA (ea)	LRA (ea)	Qty	RLA (ea)	LRA (ea)	Qty	FLA	Hp	FLA	Qty	Hp (ea)	FLA (ea)	MCA	FUSE OR HACR BRKR*
460	414	508	3	23.1	150	3	23.1	150	6	3.3 (ea)	30	40.0	2	10	14.0	236.4	250
													2	15	21.0	250.4	300
													2	20	27.0	262.4	300
													2	25	34.0	276.4	300
													2	30	40.0	288.4	300
											40	52.0	2	10	14.0	251.4	300
													2	15	21.0	265.4	300
													2	20	27.0	277.4	300
													2	25	34.0	291.4	300
													2	30	40.0	303.4	350
											50	65.0	2	10	14.0	267.7	300
													2	15	21.0	281.7	300
													2	20	27.0	293.7	350
													2	25	34.0	307.7	350
													2	30	40.0	319.7	350
											60	77.0	2	10	14.0	282.7	350
													2	15	21.0	296.7	350
													2	20	27.0	308.7	350
													2	25	34.0	322.7	350
													2	30	40.0	334.7	400
											75	96.0	2	10	14.0	306.4	400
													2	15	21.0	320.4	400
													2	20	27.0	332.4	400
													2	25	34.0	346.4	400
													2	30	40.0	358.4	450
575	518	632	3	19.9	109	3	19.9	109	6	2.6 (ea)	30	32.0	2	10	11.0	197.0	225
													2	15	17.0	209.0	225
													2	20	22.0	219.0	250
													2	25	27.0	229.0	250
													2	30	32.0	239.0	250
											40	41.0	2	10	11.0	208.3	225
													2	15	17.0	220.3	250
													2	20	22.0	230.3	250
													2	25	27.0	240.3	250
													2	30	32.0	250.3	300
											50	52.0	2	10	11.0	222.0	250
													2	15	17.0	234.0	250
													2	20	22.0	244.0	250
													2	25	27.0	254.0	300
													2	30	32.0	264.0	300
											60	62.0	2	10	11.0	234.5	250
													2	15	17.0	246.5	300
													2	20	22.0	256.5	300
													2	25	27.0	266.5	300
													2	30	32.0	276.5	300
											75	77.0	2	10	11.0	253.3	300
													2	15	17.0	265.3	300
													2	20	22.0	275.3	350
													2	25	27.0	285.3	350
													2	30	32.0	295.3	350

LEGEND

FLA — Full Load Amps
HACR — Heating, Air Conditioning, and Refrigeration
Hp — Nominal Horsepower
LRA — Locked Rotor Amps
MCA — Minimum Circuit Amps (for wire sizing)
RLA — Rated Load Amps

* Used to determine minimum disconnect per NEC (National Electrical Code).

NOTE: Units use 2 (low heat) or 3 (high heat) combustion fan motors rated at 0.3 FLA each.

Table 24 — Electrical Data — 48P2,P3,P4,P5090 Units with Optional Return Fan

VOLTAGE	VOLTAGE RANGE		COMPRESSOR						CONDENSER FAN MOTOR		EVAPORATOR FAN MOTOR		POWER EXHAUST			POWER SUPPLY	
			No. A1			No. B1											
3 PH, 60 Hz	Min	Max	Qty	RLA (ea)	LRA (ea)	Qty	RLA (ea)	LRA (ea)	Qty	FLA	Hp	FLA	Qty	Hp (ea)	FLA (ea)	MCA	FUSE OR HACR BRKR*
460	414	508	3	23.1	150	3	23.1	150	6	3.3 (ea)	30	40.0	1	20	27.0	235.4	250
													1	25	34.0	242.4	250
													1	30	40.0	248.4	250
													1	40	52.0	263.4	300
											40	52.0	1	20	27.0	250.4	300
													1	25	34.0	257.4	300
													1	30	40.0	263.4	300
													1	40	52.0	275.4	300
											50	65.0	1	20	27.0	266.7	300
													1	25	34.0	273.7	300
													1	30	40.0	279.7	300
													1	40	52.0	291.7	350
											60	77.0	1	20	27.0	281.7	350
													1	25	34.0	288.7	350
													1	30	40.0	294.7	350
													1	40	52.0	306.7	350
											75	96.0	1	20	27.0	305.4	400
													1	25	34.0	312.4	400
													1	30	40.0	318.4	400
													1	40	52.0	330.4	400
575	518	632	3	19.9	109	3	19.9	109	6	2.6 (ea)	30	32.0	1	20	22.0	197.0	225
													1	25	27.0	202.0	225
													1	30	32.0	207.0	225
													1	40	41.0	218.3	250
											40	41.0	1	20	22.0	208.3	225
													1	25	27.0	213.3	250
													1	30	32.0	218.3	250
													1	40	41.0	227.3	250
											50	52.0	1	20	22.0	222.0	250
													1	25	27.0	227.0	250
													1	30	32.0	232.0	250
													1	40	41.0	241.0	250
											60	62.0	1	20	22.0	234.5	250
													1	25	27.0	239.5	300
													1	30	32.0	244.5	300
													1	40	41.0	253.5	300
											75	77.0	1	20	22.0	253.3	300
													1	25	27.0	258.3	300
													1	30	32.0	263.3	300
													1	40	41.0	272.3	300

LEGEND

FLA — Full Load Amps
HACR — Heating, Air Conditioning, and Refrigeration
Hp — Nominal Horsepower
LRA — Locked Rotor Amps
MCA — Minimum Circuit Amps (for wire sizing)
RLA — Rated Load Amps

* Used to determine minimum disconnect per NEC (National Electrical Code).

NOTE: Units use 2 (low heat) or 3 (high heat) combustion fan motors rated at 0.3 FLA each.

Table 25 — Electrical Data — 48P2,P3,P4,P5100 Standard Units

VOLTAGE	VOLTAGE RANGE		COMPRESSOR						CONDENSER FAN MOTOR		EVAPORATOR FAN MOTOR		POWER EXHAUST			POWER SUPPLY	
			No. A1			No. B1											
3 PH, 60 Hz	Min	Max	Qty	RLA (ea)	LRA (ea)	Qty	RLA (ea)	LRA (ea)	Qty	FLA	Hp	FLA	Qty	Hp (ea)	FLA (ea)	MCA	FUSE OR HACR BRKR*
460	414	508	3	23.1	150	3	26.9	179	6	3.3 (ea)	30	40.0	—	—	—	219.8	250
													2	5.0	7.6	235.0	250
													2	7.5	11.0	241.8	250
													2	10.0	14.0	247.8	250
											40	52.0	—	—	—	234.8	250
													2	5.0	7.6	250.0	300
													2	7.5	11.0	256.8	300
													2	10.0	14.0	262.8	300
											50	65.0	—	—	—	251.1	300
													2	5.0	7.6	266.3	300
													2	7.5	11.0	273.1	300
													2	10.0	14.0	279.1	300
											60	77.0	—	—	—	266.1	300
													2	5.0	7.6	281.3	350
													2	7.5	11.0	288.1	350
													2	10.0	14.0	294.1	350
											75	96.0	—	—	—	289.8	350
													2	5.0	7.6	305.0	400
													2	7.5	11.0	311.8	400
													2	10.0	14.0	317.8	400
575	518	632	3	19.9	109	3	23.7	132	6	2.6 (ea)	30	32.0	—	—	—	186.4	200
													2	5.0	6.1	198.6	225
													2	7.5	9.0	204.4	225
													2	10.0	11.0	208.4	225
											40	41.0	—	—	—	197.7	225
													2	5.0	6.1	209.9	250
													2	7.5	9.0	215.7	250
													2	10.0	11.0	219.7	250
											50	52.0	—	—	—	211.4	250
													2	5.0	6.1	223.6	250
													2	7.5	9.0	229.4	250
													2	10.0	11.0	233.4	250
											60	62.0	—	—	—	223.9	250
													2	5.0	6.1	236.1	250
													2	7.5	9.0	241.9	300
													2	10.0	11.0	245.9	300
											75	77.0	—	—	—	242.7	300
													2	5.0	6.1	254.9	300
													2	7.5	9.0	260.7	300
													2	10.0	11.0	264.7	300

LEGEND

FLA — Full Load Amps
HACR — Heating, Air Conditioning, and Refrigeration
Hp — Nominal Horsepower
LRA — Locked Rotor Amps
MCA — Minimum Circuit Amps (for wire sizing)
RLA — Rated Load Amps

* Used to determine minimum disconnect per NEC (National Electrical Code).

NOTE: Units use 2 (low heat) or 3 (high heat) combustion fan motors rated at 0.3 FLA each.

Table 26 — Electrical Data — 48P2,P3,P4,P5100 Units with Optional High-Capacity Power Exhaust

VOLTAGE	VOLTAGE RANGE		COMPRESSOR						CONDENSER FAN MOTOR		EVAPORATOR FAN MOTOR		POWER EXHAUST			POWER SUPPLY	
			No. A1			No. B1											
3 PH, 60 Hz	Min	Max	Qty	RLA (ea)	LRA (ea)	Qty	RLA (ea)	LRA (ea)	Qty	FLA	Hp	FLA	Qty	Hp (ea)	FLA (ea)	MCA	FUSE OR HACR BRKR*
460	414	508	3	23.1	150	3	26.9	179	6	3.3 (ea)	30	40.0	2	10	14.0	247.8	250
													2	15	21.0	261.8	300
													2	20	27.0	273.8	300
													2	25	34.0	287.8	300
													2	30	40.0	299.8	300
											40	52.0	2	10	14.0	262.8	300
													2	15	21.0	276.8	300
													2	20	27.0	288.8	300
													2	25	34.0	302.8	350
													2	30	40.0	314.8	350
											50	65.0	2	10	14.0	279.1	300
													2	15	21.0	293.1	350
													2	20	27.0	305.1	350
													2	25	34.0	319.1	350
													2	30	40.0	331.1	350
											60	77.0	2	10	14.0	294.1	350
													2	15	21.0	308.1	350
													2	20	27.0	320.1	350
													2	25	34.0	334.1	400
													2	30	40.0	346.1	400
											75	96.0	2	10	14.0	317.8	400
													2	15	21.0	331.8	400
													2	20	27.0	343.8	400
													2	25	34.0	357.8	450
													2	30	40.0	369.8	450
575	518	632	3	19.9	109	3	23.7	132	6	2.6 (ea)	30	32.0	2	10	11.0	208.4	225
													2	15	17.0	220.4	250
													2	20	22.0	230.4	250
													2	25	27.0	240.4	250
													2	30	32.0	250.4	300
											40	41.0	2	10	11.0	219.7	250
													2	15	17.0	231.7	250
													2	20	22.0	241.7	250
													2	25	27.0	251.7	300
													2	30	32.0	261.7	300
											50	52.0	2	10	11.0	233.4	250
													2	15	17.0	245.4	250
													2	20	22.0	255.4	300
													2	25	27.0	265.4	300
													2	30	32.0	275.4	300
											60	62.0	2	10	11.0	245.9	300
													2	15	17.0	257.9	300
													2	20	22.0	267.9	300
													2	25	27.0	277.9	300
													2	30	32.0	287.9	300
											75	77.0	2	10	11.0	264.7	300
													2	15	17.0	276.7	350
													2	20	22.0	286.7	350
													2	25	27.0	296.7	350
													2	30	32.0	306.7	350

LEGEND

FLA — Full Load Amps
HACR — Heating, Air Conditioning, and Refrigeration
Hp — Nominal Horsepower
LRA — Locked Rotor Amps
MCA — Minimum Circuit Amps (for wire sizing)
RLA — Rated Load Amps

* Used to determine minimum disconnect per NEC (National Electrical Code).

NOTE: Units use 2 (low heat) or 3 (high heat) combustion fan motors rated at 0.3 FLA each.

Table 27 — Electrical Data — 48P2,P3,P4,P5100 Units with Optional Return Fan

VOLTAGE	VOLTAGE RANGE		COMPRESSOR						CONDENSER FAN MOTOR		EVAPORATOR FAN MOTOR		POWER EXHAUST			POWER SUPPLY	
			No. A1			No. B1											
3 PH, 60 Hz	Min	Max	Qty	RLA (ea)	LRA (ea)	Qty	RLA (ea)	LRA (ea)	Qty	FLA	Hp	FLA	Qty	Hp (ea)	FLA (ea)	MCA	FUSE OR HACR BRKR*
460	414	508	3	23.1	150	3	26.9	179	6	3.3 (ea)	30	40.0	1	20	27.0	246.8	250
													1	25	34.0	253.8	300
													1	30	40.0	259.8	300
													1	40	52.0	274.8	300
											40	52.0	1	20	27.0	261.8	300
													1	25	34.0	268.8	300
													1	30	40.0	274.8	300
													1	40	52.0	286.8	300
											50	65.0	1	20	27.0	278.1	300
													1	25	34.0	285.1	350
													1	30	40.0	291.1	350
													1	40	52.0	303.1	350
											60	77.0	1	20	27.0	293.1	350
													1	25	34.0	300.1	350
													1	30	40.0	306.1	350
													1	40	52.0	318.1	350
											75	96.0	1	20	27.0	316.8	400
													1	25	34.0	323.8	400
													1	30	40.0	329.8	400
													1	40	52.0	341.8	400
575	518	632	3	19.9	109	3	23.7	132	6	2.6 (ea)	30	32.0	1	20	22.0	208.4	225
													1	25	27.0	213.4	225
													1	30	32.0	218.4	250
													1	40	41.0	229.7	250
											40	41.0	1	20	22.0	219.7	250
													1	25	27.0	224.7	250
													1	30	32.0	229.7	250
													1	40	41.0	238.7	250
											50	52.0	1	20	22.0	233.4	250
													1	25	27.0	238.4	250
													1	30	32.0	243.4	250
													1	40	41.0	252.4	300
											60	62.0	1	20	22.0	245.9	300
													1	25	27.0	250.9	300
													1	30	32.0	255.9	300
													1	40	41.0	264.9	300
											75	77.0	1	20	22.0	264.7	300
													1	25	27.0	269.7	300
													1	30	32.0	274.7	350
													1	40	41.0	283.7	350

LEGEND

FLA — Full Load Amps
HACR — Heating, Air Conditioning, and Refrigeration
Hp — Nominal Horsepower
LRA — Locked Rotor Amps
MCA — Minimum Circuit Amps (for wire sizing)
RLA — Rated Load Amps

* Used to determine minimum disconnect per NEC (National Electrical Code).

NOTE: Units use 2 (low heat) or 3 (high heat) combustion fan motors rated at 0.3 FLA each.

Step 13 — Connect Air Pressure Tubing — Before options such as the variable frequency drive (VFD) and/or modulating power exhaust can operate properly, the pneumatic tubing for pressure sensing must be installed. Use fire-retardant plenum tubing (field-supplied). All control devices use 1/4-in. tubing. Tubing must be run from the appropriate sensing location (in the duct or in the building space) to the control device location in the unit.

VARIABLE FREQUENCY DRIVE — The tubing for the duct pressure (DP) control option should sample supply duct pressure approximately 2/3 of the way out from the unit in the main trunk duct, at a location where a constant duct pressure is desired.

On these units, the duct pressure is sensed by a pressure transducer. The pressure transducer output is directed to the unit control module. On all sizes, the DP transducer is located in the unit auxiliary control box. See Fig. 44 and 45 for auxiliary control box location. See Fig. 46-48 for auxiliary control box details. Use a nominal 1/4-in. plastic tubing.

Refer to appropriate base unit Controls and Troubleshooting book for instructions on adjusting set points for duct pressure controls.

MODULATING POWER EXHAUST — The tubing for the building pressure (BP) control (achieved via the modulating power exhaust option) should sample building pressure in the area near the entrance lobby (or other appropriate and sensitive location) so that location is controlled as closely to design pressures as possible.

These units use a pressure transducer for sensing building pressure. The BP transducer is located in the unit auxiliary control box. See Fig. 44 and 45 for auxiliary control box location. See Fig. 46 and 47 for auxiliary control box details. Use a nominal 1/4-in. plastic tubing.

For instructions on adjusting BP control set points, refer to the Controls and Troubleshooting book.

RETURN FAN POWER EXHAUST — The tubing for the building pressure (BP) control (achieved via the return power exhaust option) should sample building pressure in the area near the entrance lobby (or other appropriate and sensitive location) so that location is controlled as closely to design pressures as possible.

The units use a pressure transducer for sensing building pressure. The BP transducer is located in the unit auxiliary control box. See Fig. 45 for auxiliary control box location. See Fig. 48 for auxiliary control box details. Use a nominal 1/4 in. plastic tubing.

For instructions on adjusting BP control set points, refer to the Controls and Troubleshooting book.

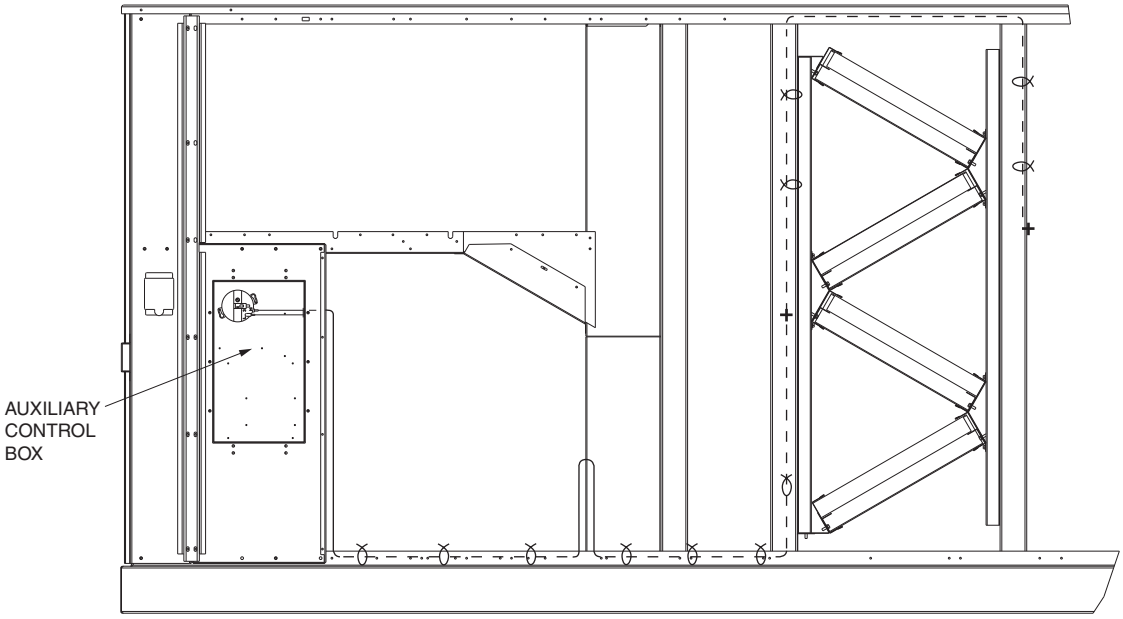

Fig. 44 — Auxiliary Control Box Location (Sizes 030-050)

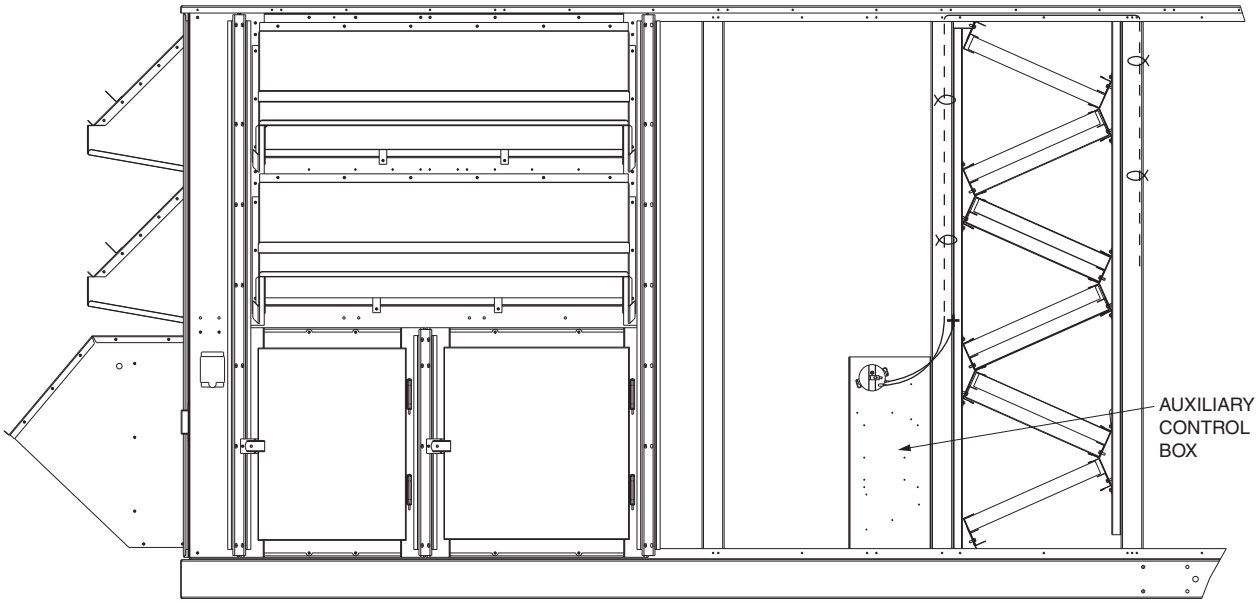

Fig. 45 — Auxiliary Control Box Location (Sizes 055-100)

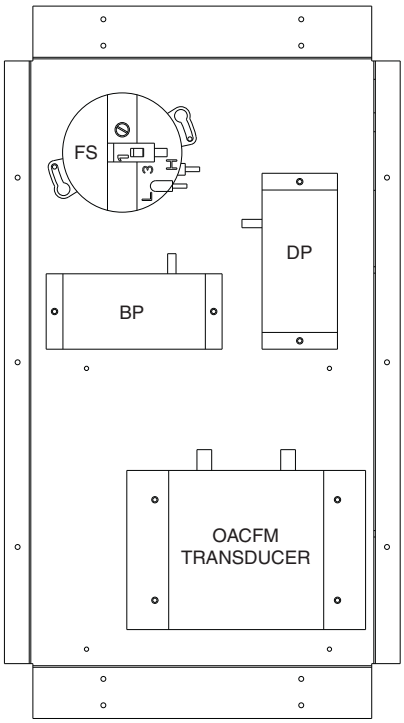

LEGEND

BP — Building Pressure Transducer
DP — Duct Pressure Transducer
FS — Filter Switch
OACFM— Outdoor Air Cfm Sensor Transducer

Fig. 46 — Auxiliary Control Box Details (Sizes 030-050)

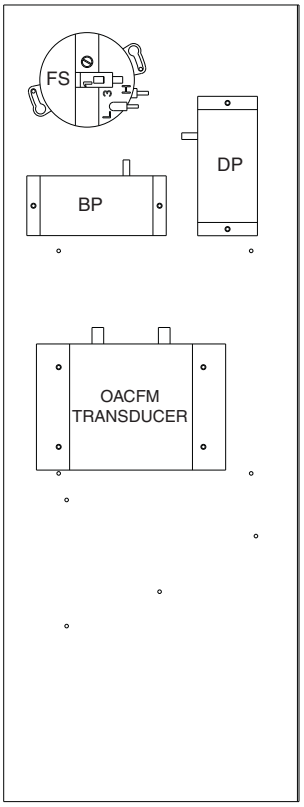

LEGEND

BP — Building Pressure Transducer
DP — Duct Pressure Transducer
FS — Filter Switch
OACFM— Outdoor Air Cfm Sensor Transducer

Fig. 47 — Auxiliary Control Box Details (Sizes 055-100 without Optional Return Fan)

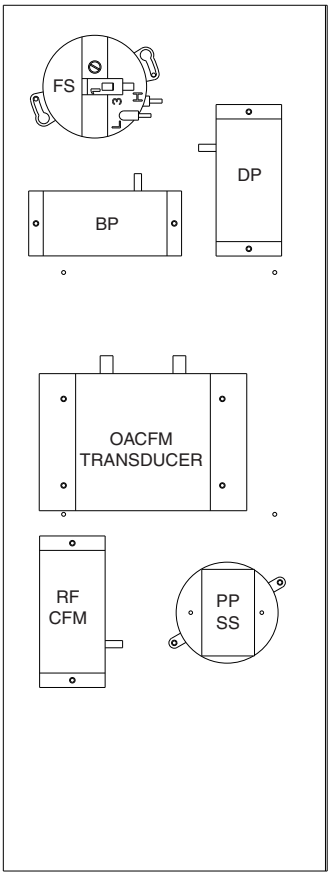

LEGEND

BP — Building Pressure Transducer
DP — Duct Pressure Transducer
FS — Filter Switch
OACFM — Outdoor Air Cfm Sensor Transducer
PPSS — Plenum Pressure Safety Switch
RFCFM — Return Fan Cfm Sensor Transducer

Fig. 48 — Auxiliary Control Box Details (Size 075-100 Units with Optional Return Fan)

Step 14 — Remove Supply-Fan Shipping Brackets — Supply-fan shipping brackets (4 per unit) must be removed from each corner of the fan sled before starting unit.

UNIT SIZES 030-050

1. To remove brackets, raise fan sled by turning adjusting bolt counterclockwise until spring is compressed slightly.
2. Remove screws holding shipping bracket to unit cross rail.
3. Remove shipping bracket (top of bracket is slotted so that it will slide out).
4. After removing all shipping brackets, level fan sled using the adjusting screws. On all 4 corners, dimension from cross rail to fan sled should be as shown in Fig. 49.

UNIT SIZES 055-070 — To remove shipping brackets, remove the 6 screws holding each bracket to the cross rail. There are 8 brackets per unit. See Fig. 50.

After removing all shipping brackets, level fan sled using the adjusting screws. On all 4 corners dimension from cross rail to fan sled should be as shown in Fig. 50.

UNIT SIZES 075-100 — To remove shipping brackets, remove the 6 screws holding each bracket to the cross rail. There are 4 brackets per unit. See Fig. 51.

After removing all shipping brackets, level fan sled using the adjusting screws. On all 4 corners dimension from cross rail to fan sled should be as shown in Fig. 51.

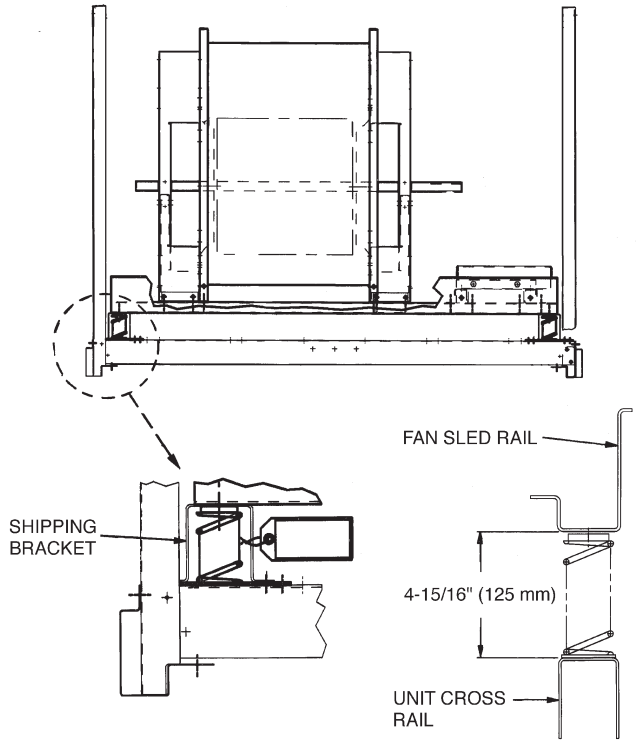

Fig. 49 — Shipping Brackets; Size 030-050 Units

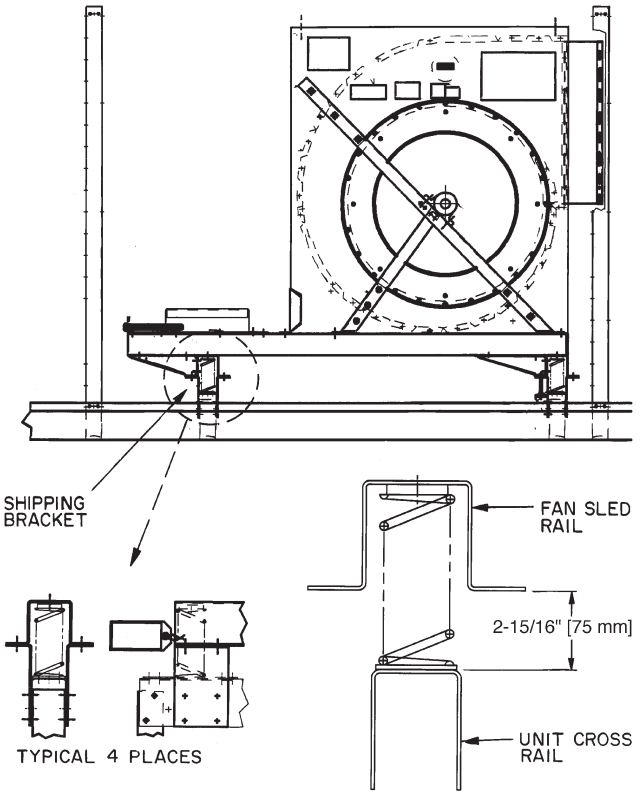

Fig. 50 — Shipping Brackets; Size 055-070 Units

Step 15 — Remove Optional Return-Fan Shipping Brackets — Optional return fan shipping brackets must be removed from each corner of the fan sled before starting unit.

To remove shipping brackets, remove 2 screws holding each bracket to the cross rail. There are 4 brackets per unit.

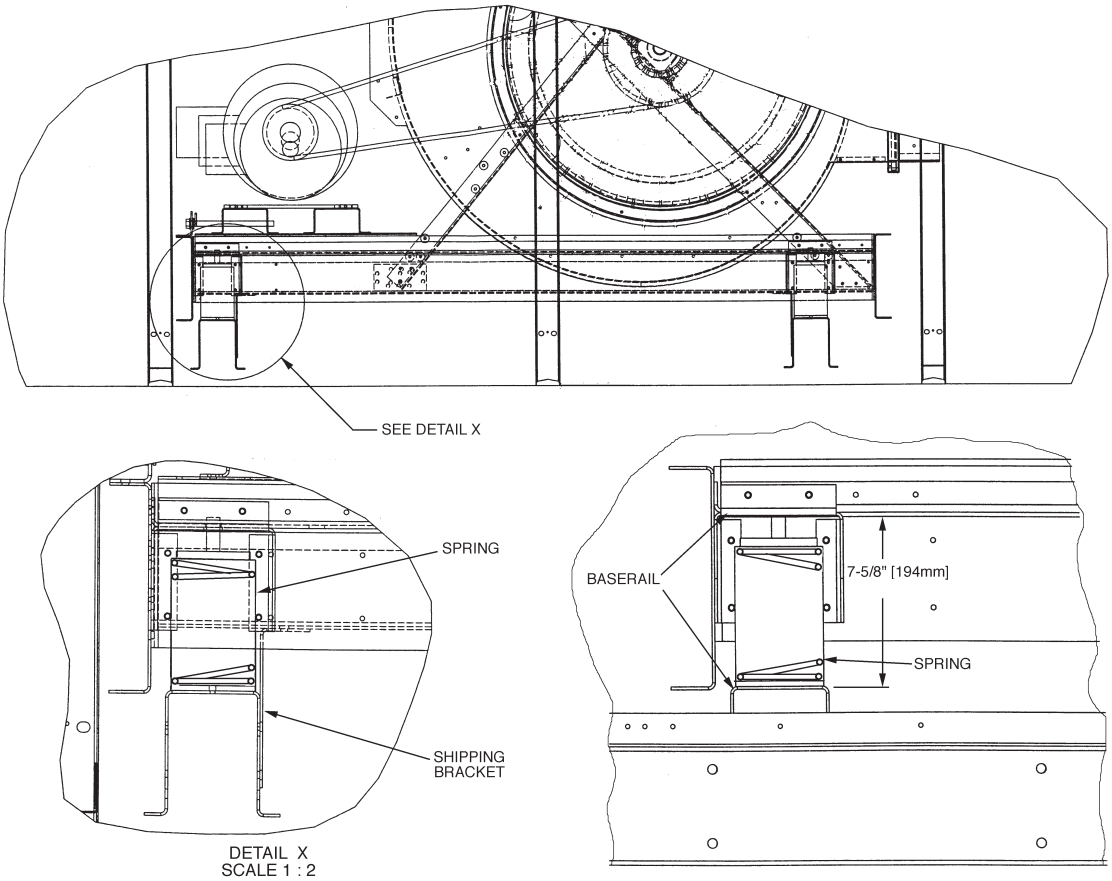

Fig. 51 — Shipping Brackets (Sizes 075-100)

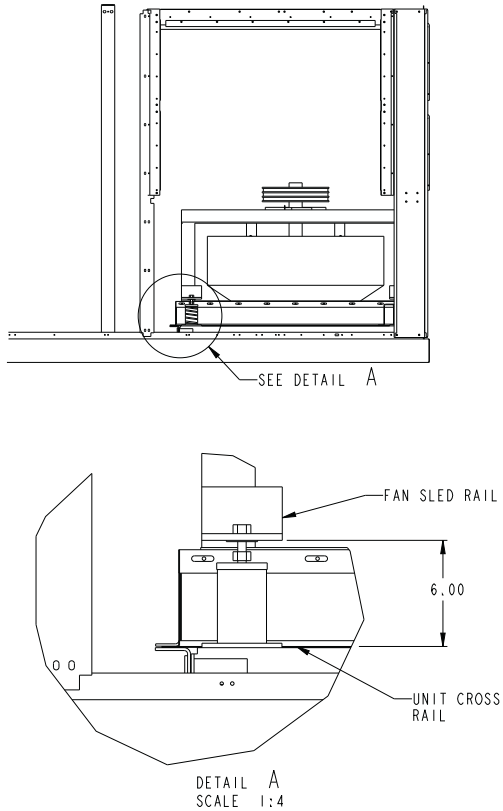

NOTE: All dimensions are in inches.

Fig. 52 — Optional Return Fan Shipping Brackets

After removing all shipping brackets, level the fan using the adjustment screws. On all 4 corners the dimension from cross rail to fan sled should be as shown in Fig. 52.

Step 16 — Connect Gas Piping — Unit is equipped for use with natural gas only. Installation must conform with local building codes, or in the absence of local codes, with the National Fuel Gas Code (NFGC), ANSI Z223.1.

A $^1/_8$-in. NPT tapping plug, accessible for test gage connection, must be field installed immediately upstream of gas supply connection to unit, but after manual gas valve. See Fig. 53. Natural gas pressure at unit gas connection must not be less than 5 in. wg or greater than 13 in. wg.

Size gas supply piping for 0.5 in. wg maximum pressure drop. Do not use supply pipe smaller than unit gas connection.

⚠ CAUTION

Disconnect gas piping from unit when leak testing at pressures greater than 0.5 psig. Pressures greater than 0.5 psig will cause gas valve damage resulting in a hazardous condition. If gas valve is subjected to pressure greater than 0.5 psig, it must be replaced.

Step 17 — Configure Optional Staged Gas or Modulating Gas Control — The 48P Series large rooftop units may be ordered with an optional factory-installed staged gas or modulating gas control system that monitors heating operation of the rooftop.

Refer to the Unit Controls and Troubleshooting book for information on configuring staged gas or modulating gas control.

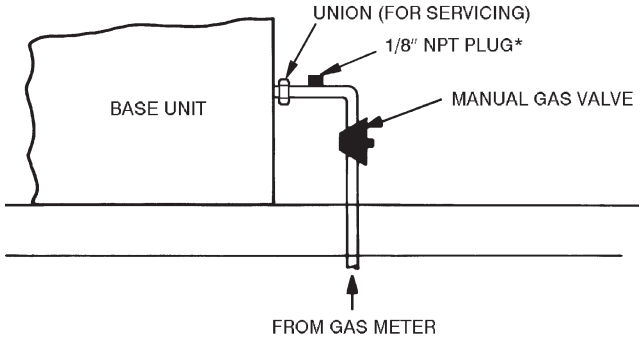

*NPT plug is field supplied.
NOTE: Follow all local codes.

Fig. 53 — Gas Piping Details

Step 18 — Install Flue/Inlet Hoods and Baffles — The flue/inlet hoods and baffles are shipped in a package taped to the basepan in the fan section. The flue (outlet) hoods are pre-assembled. The flue deflector, inlet hoods, and baffles require assembly.

The hoods are located on the heating section access panel as shown in Fig. 54 (sizes 030-050), Fig. 55 (sizes 055-100 with low heat and vertical supply), Fig. 56 (sizes 055-100 with low heat and horizontal supply), and Fig. 57 (sizes 055-100 with high heat). The inlet baffles are located inside the access panel as illustrated in Fig. 58 (sizes 030-050), Fig. 59 (sizes 055-100 with modulating low heat and horizontal supply), and Fig. 60 (sizes 055-100 with modulating high heat). See Table 28 for a list of parts used to assemble each hood and quantities of each hood type and baffle used with each unit.

1. Remove shipping block-offs and shipping tape from all openings in the access panel.
2. Attach flue outlet hoods (see Fig. 61) to access panel using screws provided. Hoods are placed over each combustion outlet.
3. Install flue deflector baffle inside flue deflector hood. See Fig 62 for V-type deflector and Fig. 63 for curve-type deflector. For V-type deflector, screw the baffle and hood together with screw provided. Refer to Table 28 for usage.
4. Install flue deflector hood assembly over each flue outlet hood. See Fig. 64. Observe the offset mounting hole locations in the deflector hood flanges when attaching hood to panel. Holes in the mounting flange must be at the bottom when attached.
5. Inlet hoods are shipped unassembled and must be assembled on the access panel (see Fig. 65-67). Flanges of the hood top and sides should be installed on the inside of the access panel openings with the screws provided. The sides should be placed on the inside of top hoods for all hood assemblies (6-in., 14-in., and 30-in.). Attach speed clips to screen. Insert screen into bottom opening of 6-in. and 14-in. hoods and secure it with 3 screws. To ease the installation, the 30-in. hood screen may be inserted from inside of access panel (gas section door) into bottom opening of hood. Secure with 5 screws. Attached view port cover over 14-in. inlet hood opening (Fig. 66). Secure with two screws.
6. Install inlet baffle on the access panel with the screw(s) provided. See Fig. 68 for 14-in. baffle and Fig. 69 for 30-in. baffle. Attach 14-in. baffle from the outside of the access panel. The 30-in. baffle should be installed from inside of the access panel. Secure with three screws.

Step 19 — Install Supply-Air Thermistors (Staged and Modulating Gas Units Only) — Supply-air thermistors are a field-installed, factory-provided component. Three supply-air thermistors are shipped with staged and modulating gas units inside the unit control box. Thermistor wires must be connected to the SGC in the unit control box. See Table 29. The supply-air thermistors should be located in the supply duct with the following criteria:

- downstream of the heat exchanger cells
- equally spaced as far as possible from the heat exchanger cells
- a duct location where none of the supply air thermistors are within sight of the heat exchanger cells
- a duct location with good mixed supply air portion of the unit.

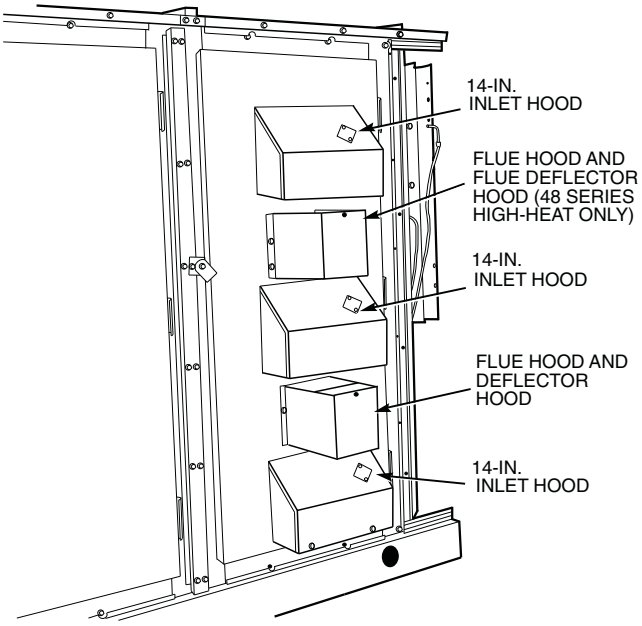

Fig. 54 — Flue/Inlet Hood Locations, 030-050 Units

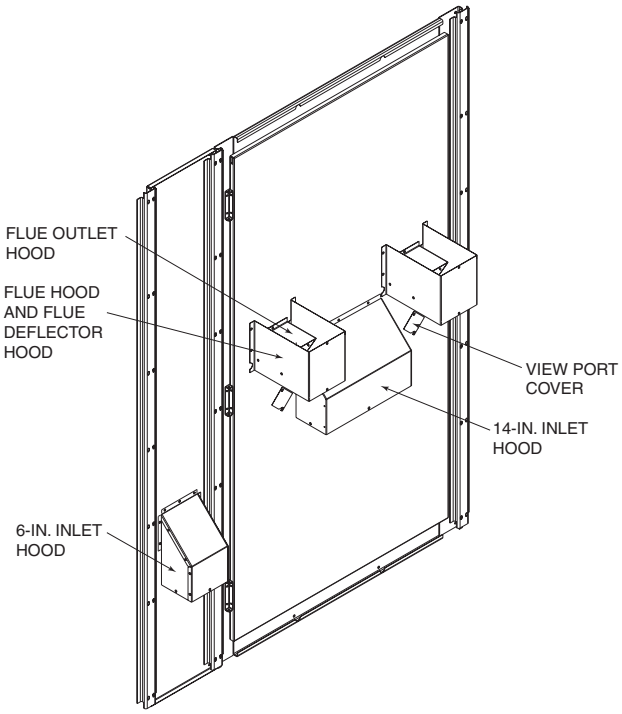

Fig. 55 — Flue/Inlet Hood Locations, Sizes 055-100, Low Heat, Vertical Supply Units

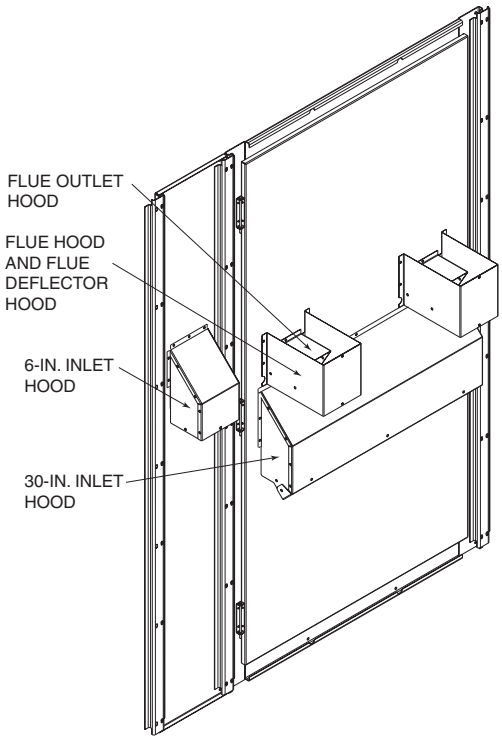

Fig. 56 — Flue/Inlet Hood Locations, Sizes 055-100, Low Heat, Horizontal Supply Units

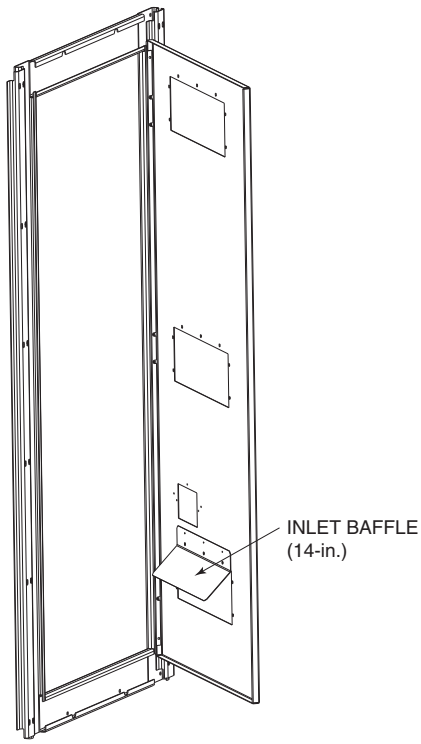

Fig. 58 — Baffle Location, 030-050 Units

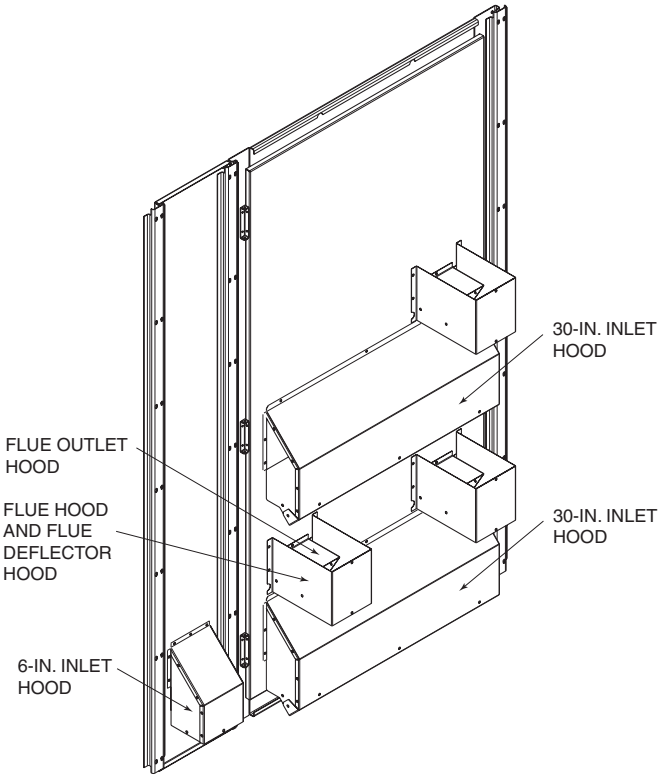

Fig. 57 — Flue/Inlet Hood Locations, Sizes 055-100, High Heat, Vertical and Horizontal Supply Units

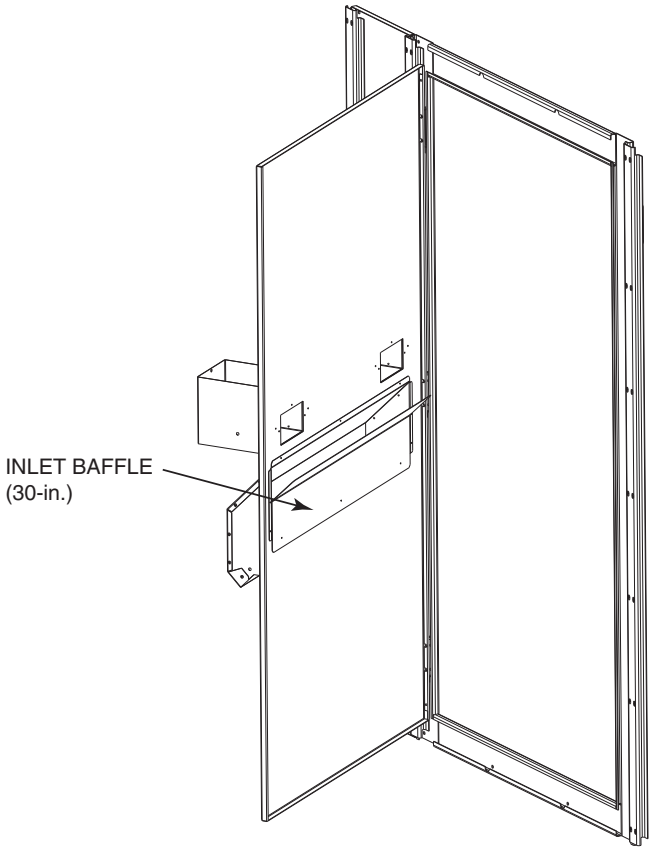

Fig. 59 — Baffle Location, Sizes 055-100, Modulating Low Heat, Horizontal Supply Units

Table 28 — Flue Hood, Inlet Hood, and Baffle Usage

HOOD OR BAFFLE TYPE	PARTS LIST	FIG. NO.	QUANTITY USED					
			Sizes 030-050 (Low Heat)	Sizes 030-050 (High Heat)	Sizes 055-070 (Low Heat)	Sizes 055-070 (High Heat)	Sizes 075-100 (Low Heat)	Sizes 075-100 (High Heat)
6-in. Inlet Hood	Top (6-in.) Side (Left) Side (Right) Screen Speed Clips Screws	65	—	—	1	1	1	1
14-in. Inlet Hood	Top (14-in.) Side (Left) Side (Right) Screen Cover Speed Clips Screws	65,66	3	3	1 (Vertical Supply Only)	—	1 (Vertical Supply Only)	—
30-in. Inlet Hood	Top (30-in.) Side (Left) Side (Right) Screen Speed Clips Screws	67	—	—	1 (Horizontal Supply Only)	2	1 (Horizontal Supply Only)	2
Flue Outlet Hood	Pre-assembled	61	1	2	2	3	2	3
Flue Deflector (V-Type)	Hood Deflector Baffle Screws	62	1	2	2 (Horizontal Supply Only)	3	2	3
Flue Deflector (Curve-Type)	Hood Deflector Baffle Screws	63	—	—	2 (Vertical Supply Only)	—	—	—
14-in. Baffle	Baffle Screws	68	1	2	—	—	—	—
30-in. Baffle	Baffle Screws	69	—	—	1 (Modulating Horizontal Supply Only)	2	1 (Modulating Horizontal Supply Only)	2

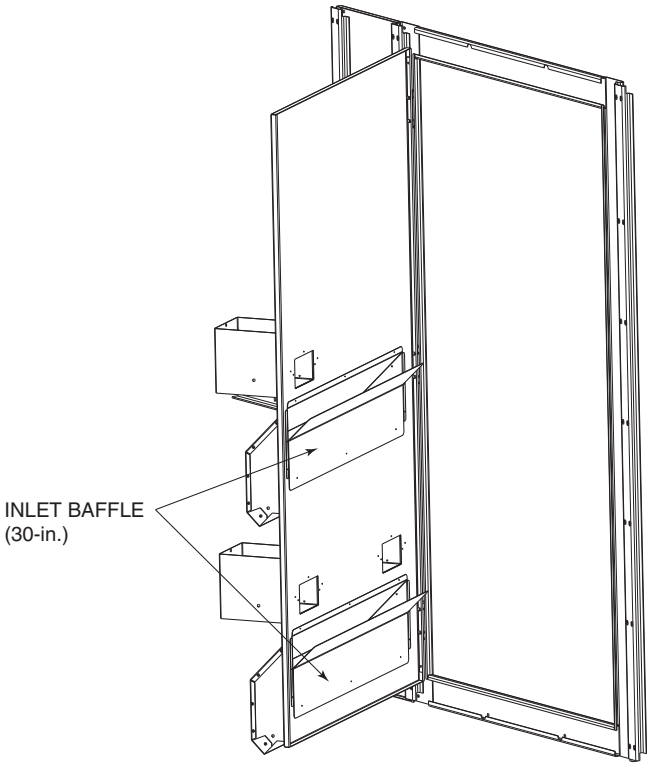

Fig. 60 — Baffle Locations, Sizes 055-100, Modulating High Heat, Vertical and Horizontal Supply Units

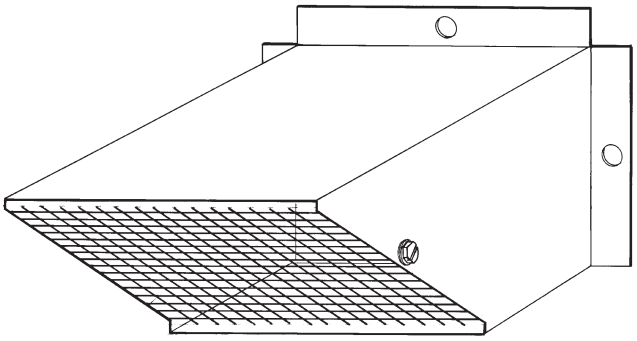

Fig. 61 — Flue Outlet Hood

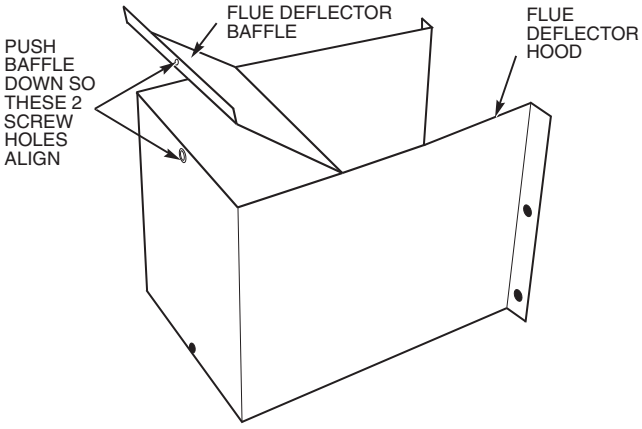

Fig. 62 — Flue Deflector Baffle (V-Type)

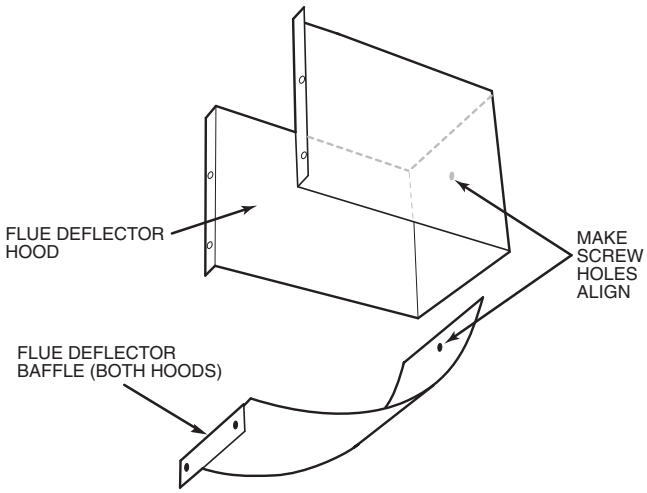

Fig. 63 — Flue Deflector Baffle (Curve-Type)

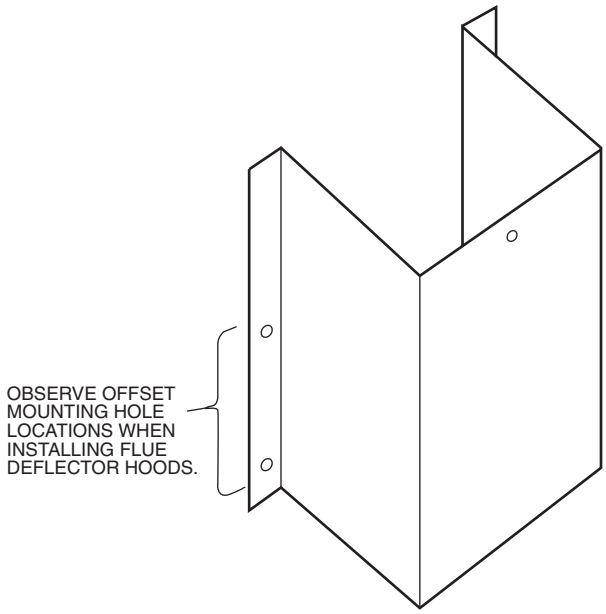

Fig. 64 — Mounting Deflector Hoods

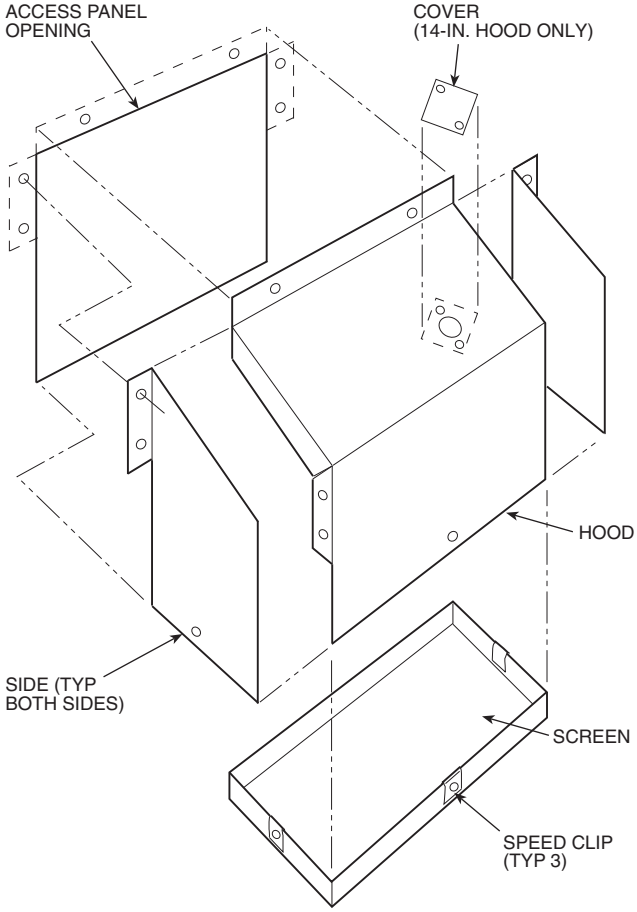

Fig. 65 — Inlet Hood Assembly (6-in. and 14-in.)

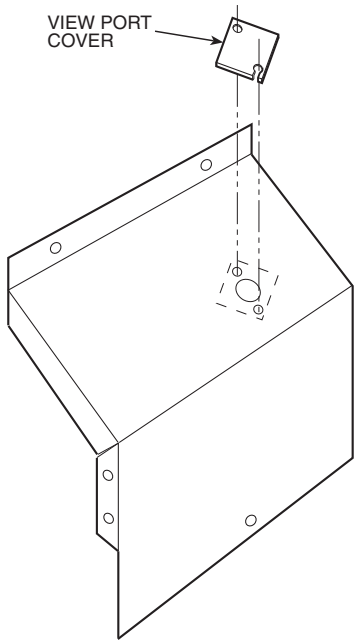

Fig. 66 — 14-in. Inlet Hood View Port Cover Installation

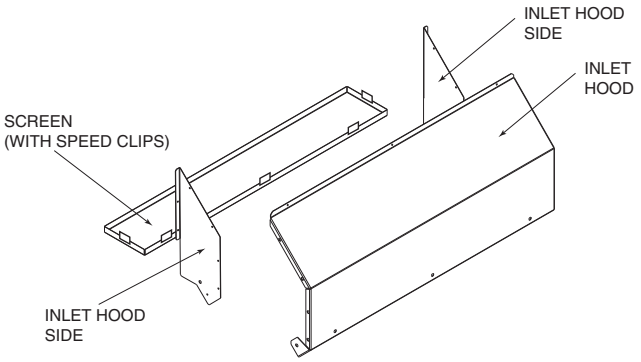

Fig. 67 — Inlet Hood Assembly (30-in.)

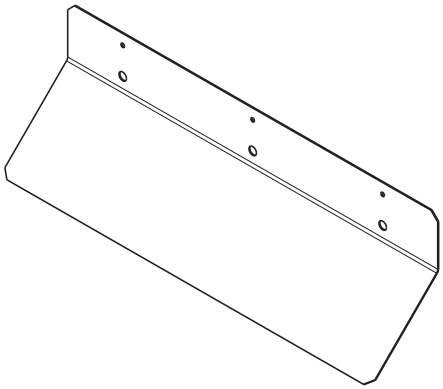

Fig. 68 — Air Baffle (14-in.)

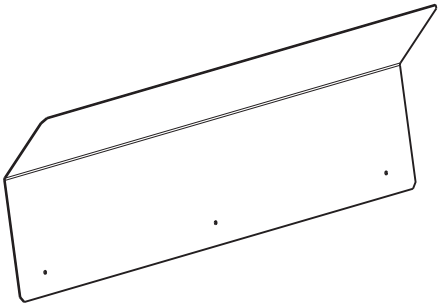

Fig. 69 — Air Baffle (30-in.)

Table 29 — SGC Thermistor Designations

THERMISTOR	PIN CONNECTION POINT	FUNCTION AND LOCATION	PART NO.
		Thermistors	
SAT1	J8 – 1,2 (SGC)	Supply-Air Thermistor (SAT) — Inserted into supply section underneath the gas heat section (factory-provided, field-installed)	HH79NZ033
SAT2	J8 – 3,4 (SGC)	Supply-Air Thermistor (SAT) — Inserted into supply section underneath the gas heat section (factory-provided, field-installed)	
SAT3	J8 – 5,6 (SGC)	Supply-Air Thermistor (SAT) — Inserted into supply section underneath the gas heat section (factory-provided, field-installed)	
LIMTTEMP	J8 – 15,16 (SGC)	Limit Switch Thermistor (LIMTTEMP) — Inserted next the lower limit switch (factory-installed)	

SGC — Staged Gas Controller

Step 20 — Install Optional Motormaster® V Control — The Motormaster V control is a motor speed control device which adjusts condenser fan motor speed in response to varying liquid refrigerant pressure. A properly applied Motormaster V control extends the operating range of air-conditioning systems and permits operation at lower outdoor ambient temperatures.

The optional Motormaster V controls are factory-installed. Field-fabricated and installed wind baffles are also required for units in areas with prevailing winds of more than 5 mph and where temperatures drop below 32°F. The Motormaster V control permits operation of the unit to an ambient temperature of –20°F. The control regulates the speed of one or two 3-phase fan motors depending on unit size. Replacement of the fan motor on most units is not necessary.

INSTALL FIELD-FABRICATED WIND BAFFLES

⚠ WARNING

To avoid the possibility of electrical shock, open all disconnects before installing or servicing this accessory.

On size 040-060 units, in areas with prevailing winds of more than 5 mph and where temperatures drop below 32°F, wind baffles must be field fabricated to ensure proper cooling cycle operation at low-ambient temperatures with Motormaster V controls. Wind baffles are not needed on size 030, 035, and 070-100 units. See Fig. 70 for baffle details. Use 20-gage galvanized sheet metal, or similar corrosion-resistant material for the baffles. Use field-supplied screws to attach baffles to unit. Screws should be $^1/_4$-in. diameter or larger. Screws should not be more than $^1/_2$-inch in length. Drill required screw holes for mounting baffles.

⚠ CAUTION

To avoid damage to refrigerant coils, electrical components, and wiring use extreme care when drilling screw holes and screwing in fasteners.

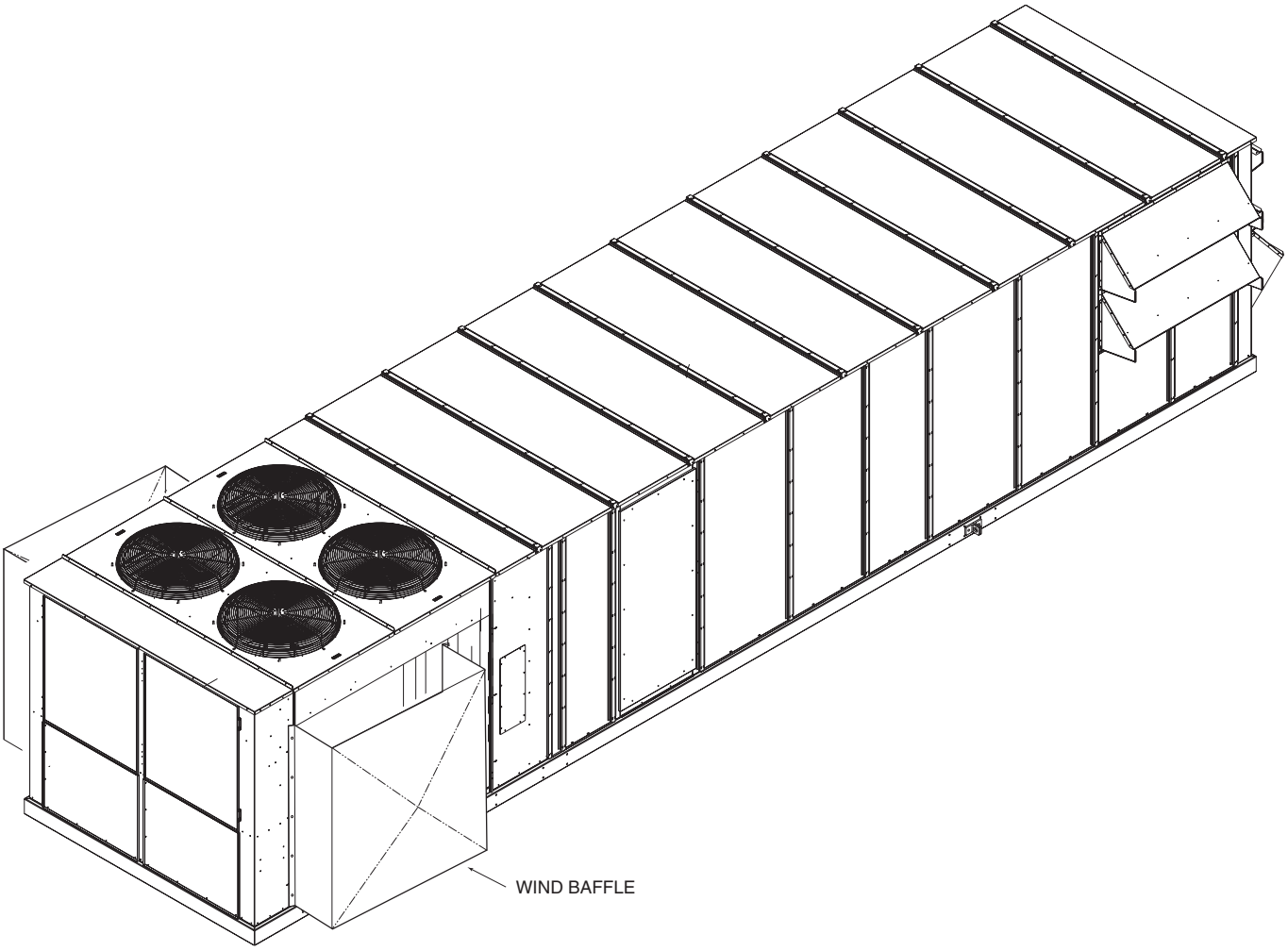

BAFFLE INSTALLATION LOCATION (SIZES 050 AND 060 SHOWN)

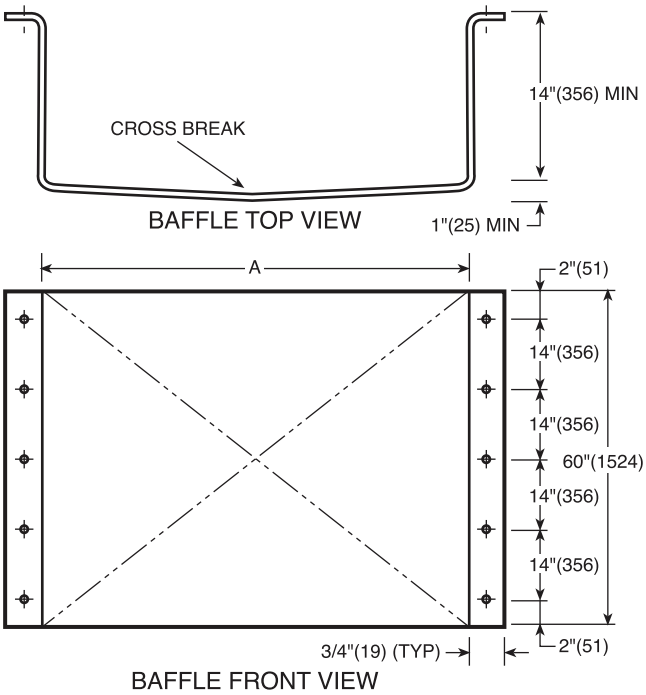

UNIT SIZE	QUANTITY	DIMENSION "A"	
		in.	mm
030,035	Not Used	—	—
040-060	2	78.125 ± 0.125	1984 ± 3
070-100	Not Used	—	—

NOTE: 48/50P030, 035, and 070-100 units do not require baffles.

Fig. 70 — Wind Baffle Details

Step 21 — Install Unit Accessories — For applications requiring accessories, the following packages are available:

All units:
- barometric relief
- space temperature sensor
- CO_2 sensor
- space temperature sensor with CO_2 sensor
- airflow switch
- filter switch
- smoke detector

All 48P2,P4 (constant volume) units:
- modulating power exhaust

All 48P3,P5 (variable air volume) units:
- modulating power exhaust

Refer to the individual accessory installation instructions in each accessory package for information on installing accessories.

CONTROLS INSTALLATION

Constant Volume (CV) Units — The 48P2,P4 units may be used in applications with additional control features, options, or accessories. Refer to the appropriate accessory installation instructions for more information on installing that accessory. Control options and accessories available for CV units are:

- thermostats
- enthalpy sensor
- enthalpy switch
- relative humidity sensor
- CEM (controls expansion module)
- Navigator™ hand-held display

CONTROL WIRING — The unit can be controlled with a Carrier-approved accessory electro-mechanical or electronic thermostat that has two stages of cooling, two stages of heating control, and an output for fan control. The thermostat may also include time of day scheduling or use scheduling routines built into the *Comfort*Link controls.

Install the thermostat according to the installation instructions shipped with the accessory thermostat. Locate thermostat assembly on a solid interior wall to sense average temperature.

Route thermostat cable or equivalent leads of colored wire from subbase terminals through conduit into the low voltage connections in the main control box. For thermostat TB201 connections, see Fig. 71.

NOTE: For wire runs up to 50 ft, use no. 18 AWG (American Wire Gage) insulated wire (35 C minimum). For over 75 ft, use no. 14 AWG insulated wire (35 C minimum). All wire larger than no. 18 AWG cannot be directly connected at the thermostat and will require a junction box and splice at the thermostat.

Variable Air Volume (VAV) Units — The 48P3,P5 units may be used in applications with additional control features, options, or accessories. Refer to the appropriate accessory installation instructions for more information on installing that accessory. Refer to the Controls and Troubleshooting manual for more information concerning installation and configuration of options and accessories. Control options and accessories available for VAV units are:

- enthalpy sensor
- enthalpy switch
- relative humidity sensor
- CEM (controls expansion module)
- Navigator hand-held display

VAV CONTROL WIRING — The recommended types of control wiring are shown below:

MANUFACTURER	PART NO.	
	Regular Wiring	Plenum Wiring
Alpha	1895	—
American	A21451	A48301
Belden	8205	884421
Columbia	D6451	—
Manhattan	M13402	M64430
Quabik	6130	—

SENSORS — Sensors should be wired using single twisted pairs of 20 AWG (American Wire Gage) conductor cable rated for the application, except for the T-56 accessory sensor which requires 3-conductor cable.

HUMIDITY CONTROL AND HOT WATER AND STEAM VALVES — These devices require 20 AWG twisted pair conductor cables rated for the application for the 4 to 20 mA signal.

SPACE TEMPERATURE SENSOR (T-55) — The space temperature sensor (P/N 33ZCT55SPT), if used, is wired to terminals in the unit main control box. To connect the space temperature sensor, see Fig. 72.

SPACE TEMPERATURE SENSOR (T-56) — The space temperature sensor (P/N 33ZCT56SPT), if used, is wired to terminals in the unit main control box. To connect the space temperature sensor, see Fig. 72.

COMMUNICATING SPACE TEMPERATURE SENSOR (T-58) — The communicating space temperature sensor (P/N 33ZCT58SPT) is wired to the Carrier Comfort Network® (CCN) connections on TB202.

SPACE TEMPERATURE AVERAGING — Applications that require averaging using multiple space temperature sensors can be satisfied using either 4 or 9 sensors as shown in Fig. 73.

NOTE: Only Carrier sensors may be used for standard T-55 space averaging. Sensors must be used in multiples of 1, 4, and 9 only, with total sensors wiring not to exceed 1000 ft.

NOTE: Do not use T-56 sensors for space temperature averaging because the 5-degree offset function will not work in a multiple sensor application.

HEAT INTERLOCK RELAY (VAV Units Only — Not Necessary for Digital Air Volume Applications) — Variable air volume (VAV) units using morning warm-up and/or occupied heating require that room terminals be controlled to a position that provides the minimum required heating cfm or greater when the unit goes into Heating mode. The HIR (heat interlock relay) function is provided for this control. When the unit goes into Heating mode, the HIR is energized to provide switch closure or opening (depending on how the field-supplied power source is set up) to open the room terminals. The field connections for the HIR are at TB201 terminals 9 and 10. See Fig. 74.

Option and Accessory Control Wiring — The P Series units may be used in applications with additional control features, options, or accessories. Refer to the Controls and Troubleshooting manual for more information concerning installation and configuration of options and accessories. Figures 74-84 contain wiring information on the following features:

- heat interlock relay (Fig. 74)
- outdoor air enthalpy switch (Fig. 75)
- CO_2 space sensor (Fig. 76)
- filter status switch (Fig. 77)
- fan status switch (Fig. 78)
- space humidity sensor (Fig. 79)
- return air humidity sensor (Fig. 79)
- return air CO_2 sensor (Fig. 80)
- return/supply air smoke detector (Fig. 81)
- smoke control — fire shutdown (Fig. 82)

- smoke control — purge (Fig. 83)
- smoke control — evacuation (Fig. 83)
- smoke control — pressurization (Fig. 83)
- CCN connections (Fig. 84)

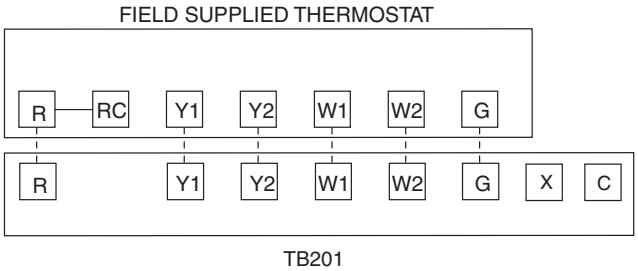

Fig. 71 — Field Control Thermostat Wiring

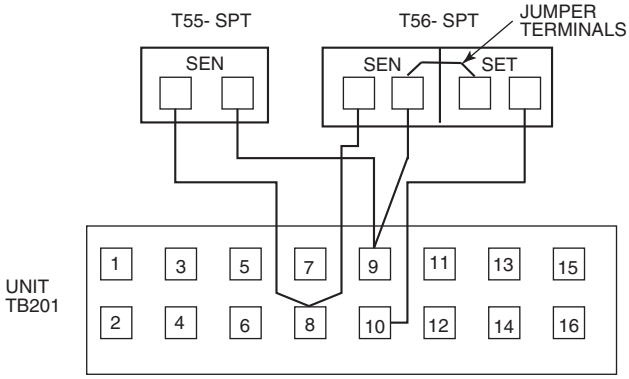

Fig. 72 — T-55 or T-56 Wiring

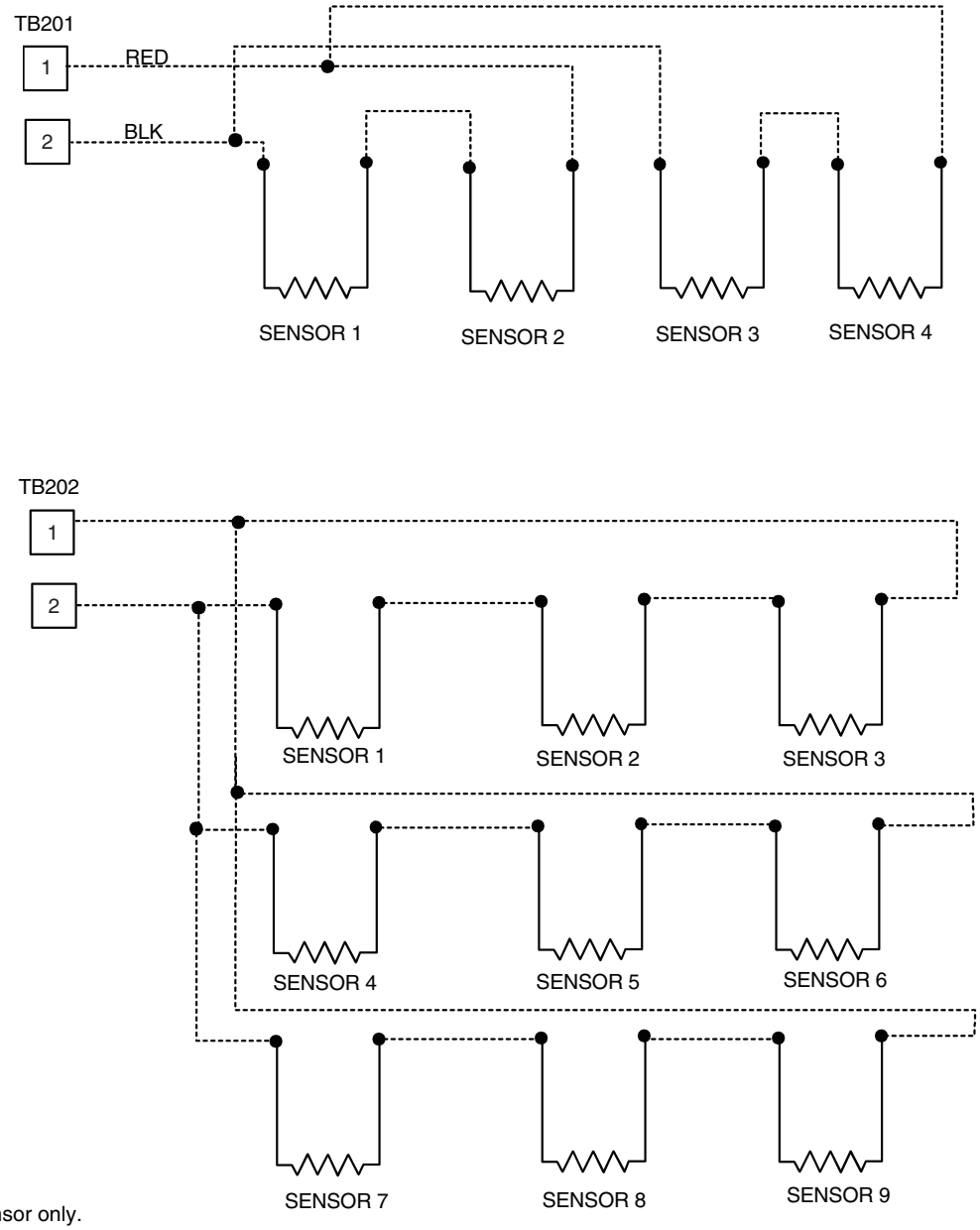

NOTE: Use T-55 sensor only.

Fig. 73 — Space Temperature Averaging Wiring

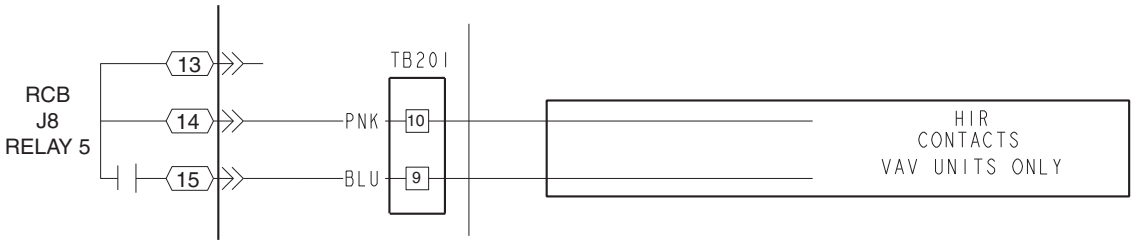

Fig. 74 — Heat Interlock Relay Wiring

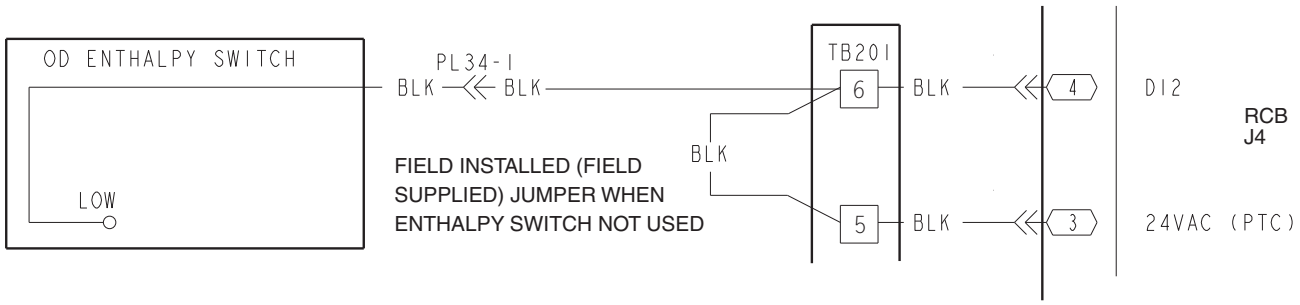

Fig. 75 — Outdoor Air Enthalpy Switch Wiring

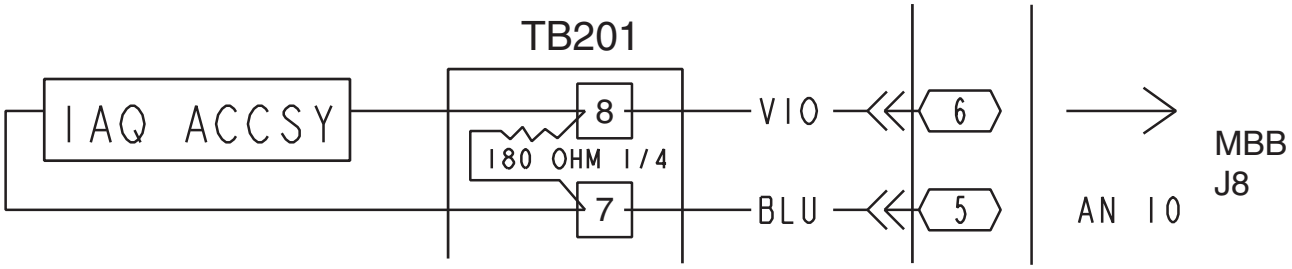

Fig. 76 — CO_2 Space Sensor Wiring

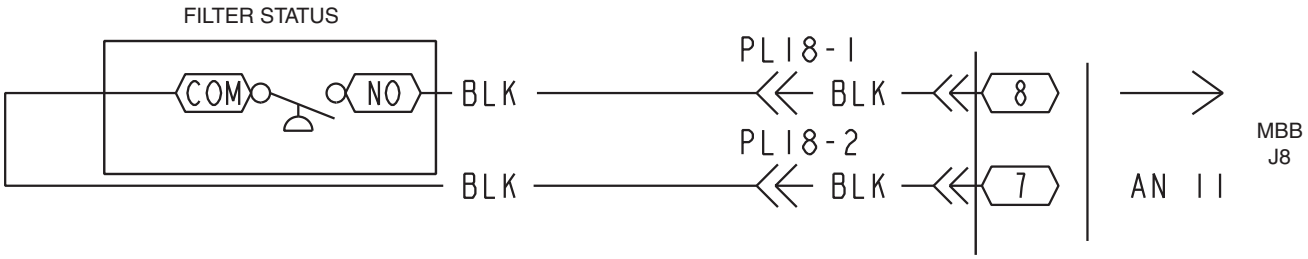

Fig. 77 — Filter Status Wiring

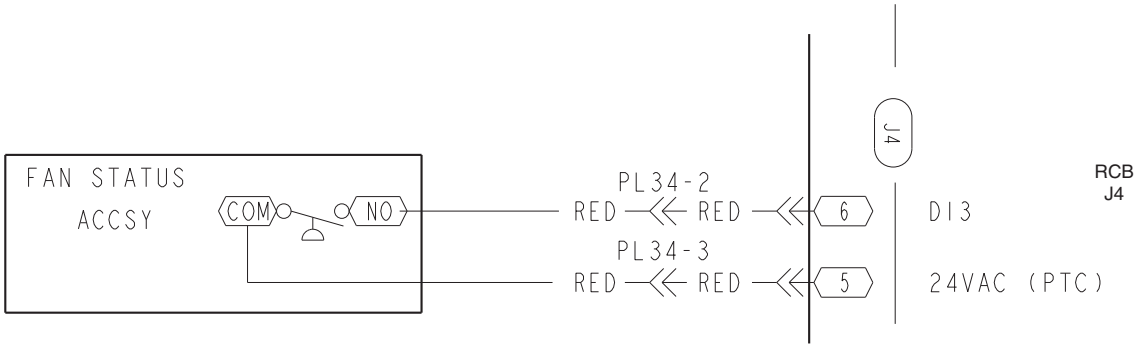

Fig. 78 — Fan Status Switch Wiring

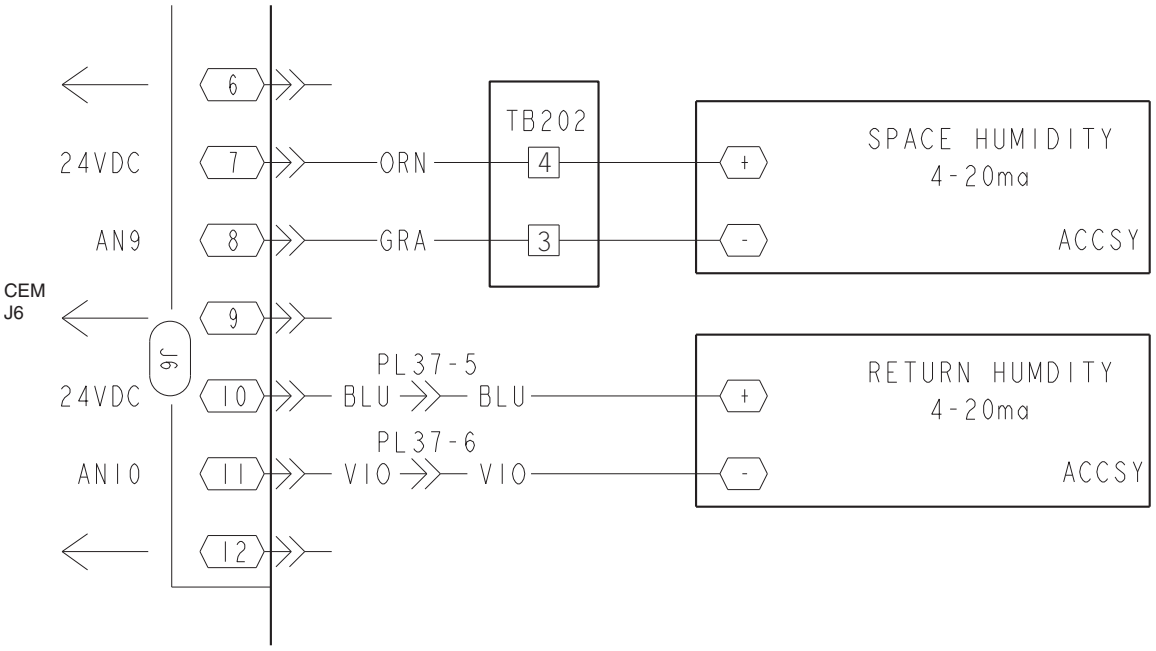

Fig. 79 — Space and Return Air Humidity Sensor Wiring

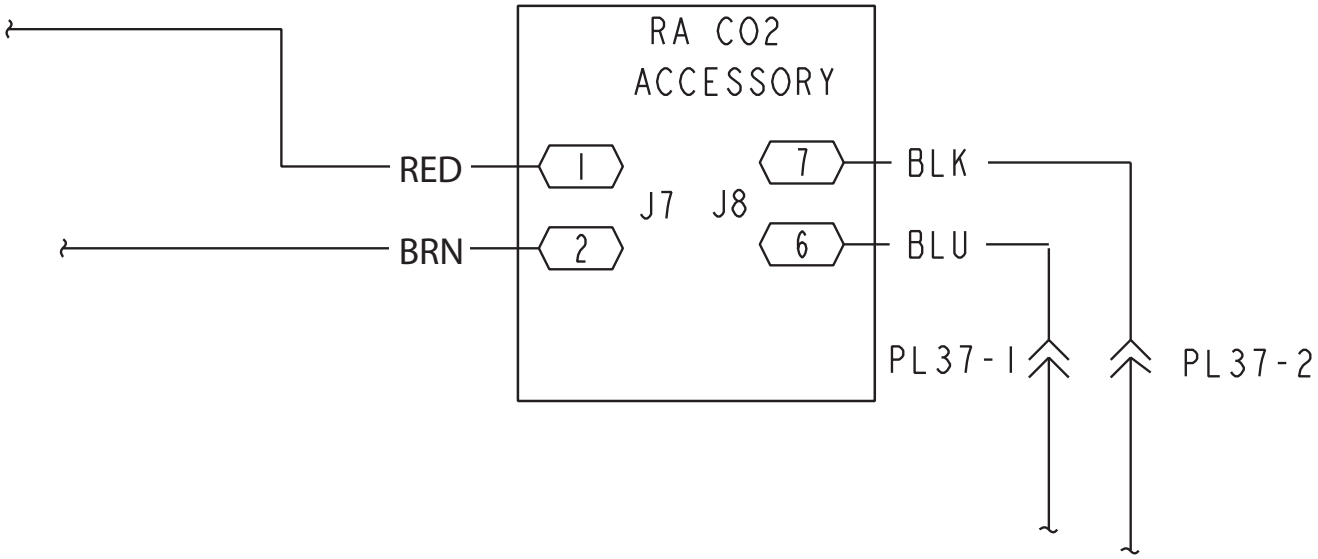

Fig. 80 — Return Air CO_2 Sensor Wiring

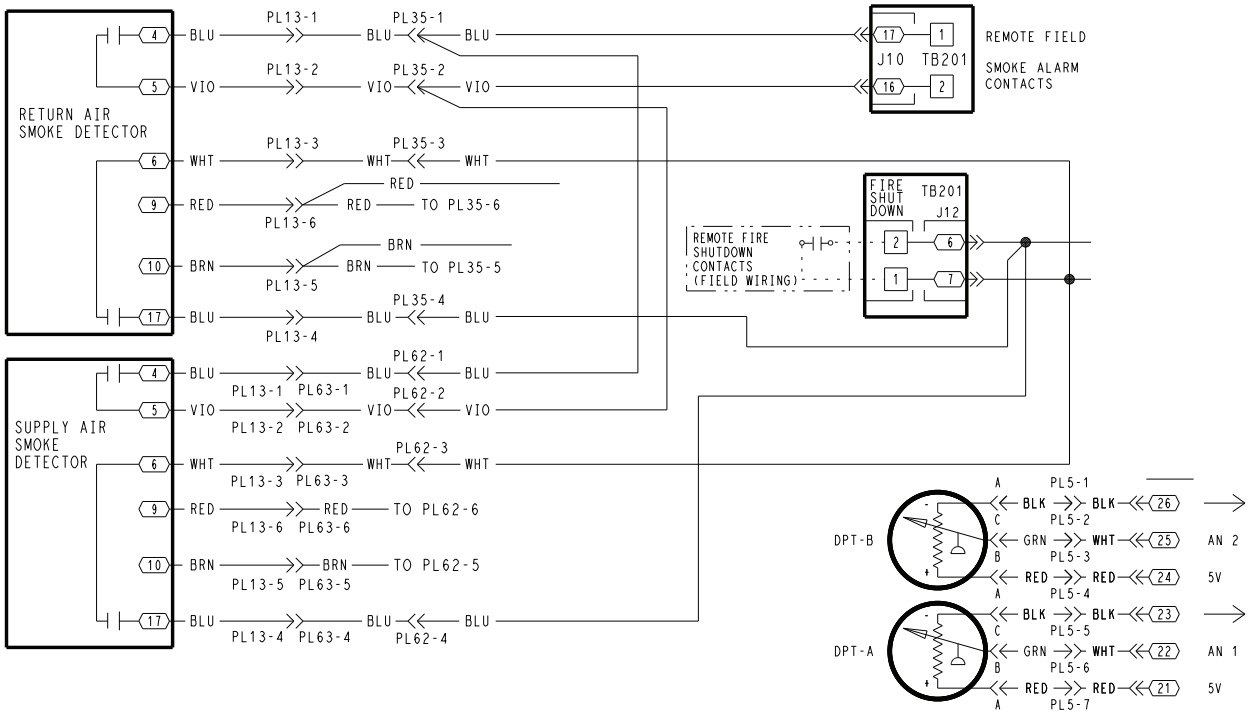

Fig. 81 — Return/Supply Air Smoke Detector Wiring

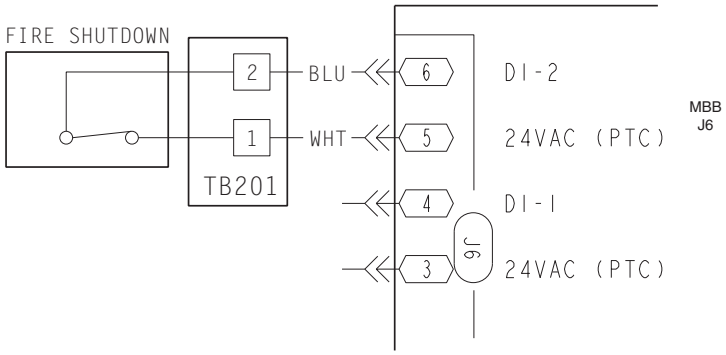

Fig. 82 — Fire Shutdown Wiring

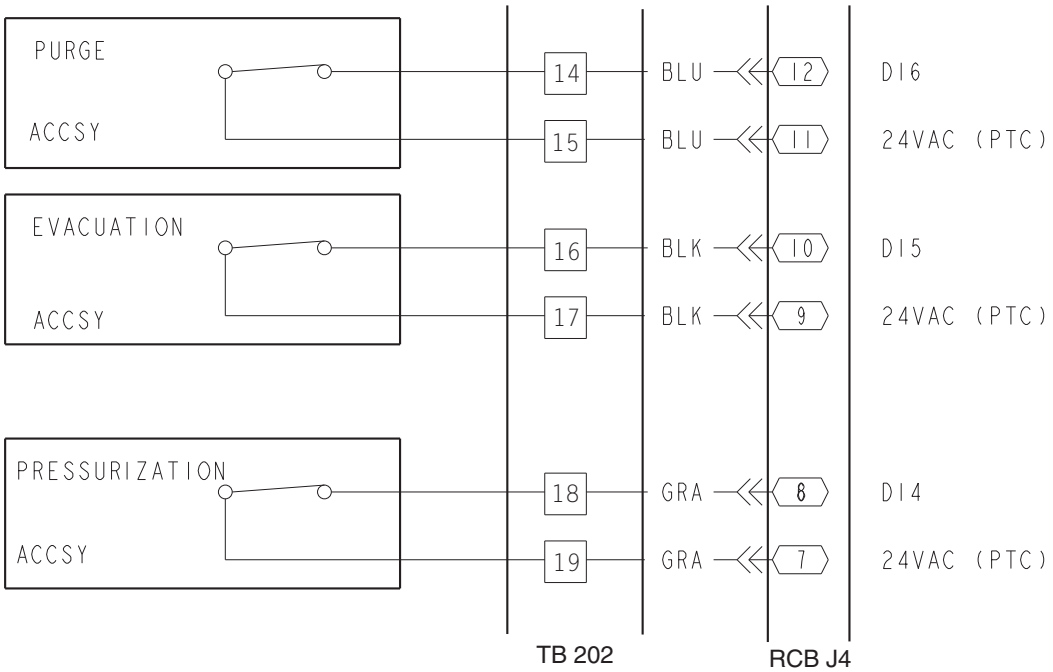

Fig. 83 — Purge, Evacuation, and Pressurization Wiring

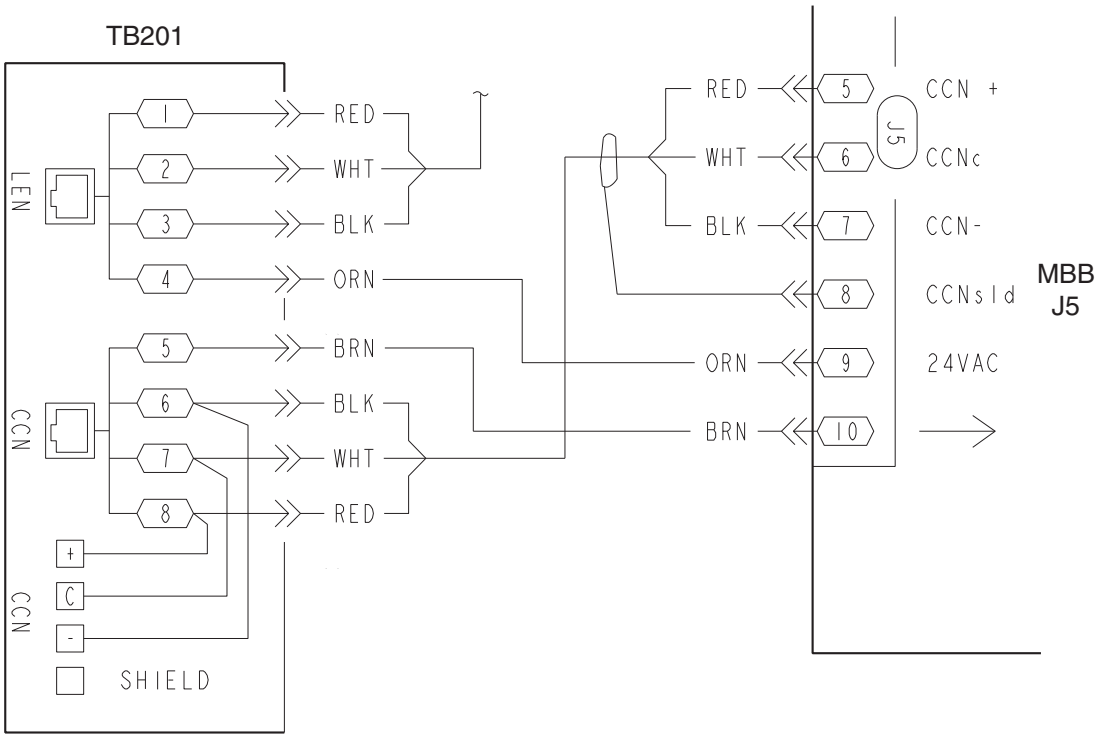

Fig. 84 — CCN Connections

Carrier Comfort Network® (CCN) Interface — The 48P Series units can be connected to the CCN system if desired. The communication bus wiring is supplied and installed in the field. It consists of shielded, 3-conductor cable with shield wire.

The system elements are connected to the communication bus in a daisy chain arrangement. The positive pin of each system element communication connector must be wired to the positive pins of the system element on either side of it, the negative pins must be wired to the negative pins, and the signal pins must be wired to common pins. Wiring connections for the CCN system should be made at the terminal block using the screw terminals. The board also contains an RJ14 CCN plug that can be used to connect a field service computer. There is also another RJ14 LEN (Local Equipment Network) connection that is used to download software or connect a Navigator™ device.

NOTE: Conductors and drain wire must be 20 AWG minimum stranded, tinned copper. Individual conductors must be insulated with PVC, PVC/nylon, vinyl, Teflon[1], or polyethylene. An aluminum/polyester 100% foil shield and an outer jacket of PVC, PVC/nylon, chrome vinyl, or Teflon with a minimum operating temperature range of –4 to 140°F (–20°C to 60°C) is required. See Table 30 for cables that meet the requirements.

Table 30 — CCN Connection Approved Shielded Cables

MANUFACTURER	CABLE PART NO.
Alpha	2413 or 5463
American	A22503
Belden	8772
Columbia	02525

1. Teflon is a registered trademark of DuPont.

IMPORTANT: When connecting the CCN communication bus to a system element, use a color coding system for the entire network to simplify installation and checkout.

The following color code is recommended:

SIGNAL TYPE	CCN BUS CONDUCTOR INSULATION COLOR	COMM1 PLUG PIN NO.
+	RED	1
COMMON	WHITE	2
–	BLACK	3

NOTE: If a cable with a different color scheme is selected, a similar color code should be adopted for the entire network.

At each system element, the shields of its communication bus cables must be tied together. If the communication bus is entirely within one building, the resulting continuous field must be connected to a ground at one point only. If the communication bus cable exits from one building and enters another, the shields must be connected to grounds at the lightning suppressor in each building where the cable enters or exits the building (one point per building only).

To connect the unit to the network (Fig. 84):

1. Turn off power to the control box.
2. Cut the CCN wire and strip the ends of the red (+), white (common) and black (–) conductors. (If a different network color scheme is used, substitute appropriate colors.)
3. Wire the CCN to the screw terminals on the COMM board as follows (Fig. 84):
   a. Secure the red (+) wire to CCN screw terminal + on the COMM board.
   b. Secure the white (common) wire to CCN screw terminal C on the COMM board.
   c. Secure the black (–) wire to CCN screw terminal – on the COMM board.

d. Secure shield wire to CCN screw terminal SHIELD on the COMM board.

> IMPORTANT: A shorted CCN bus cable will prevent some routines from running and may prevent unit from starting. If abnormal conditions occur, unplug the connector. If conditions return to normal, check CCN connector, and run new cable if necessary. A short in one section of the bus can cause problems with all system elements on the bus.

Optional UPC Open Installation

WIRING THE UPC OPEN TO THE MS/TP NETWORK — The UPC Open controller communicates using BACnet[1] on an MS/TP network segment communications at 9600 bps, 19.2 kbps, 38.4 kbps, or 76.8 kbps.

Wire the controllers on an MS/TP network segment in a daisy-chain configuration. Wire specifications for the cable are 22 AWG (American Wire Gage) or 24 AWG, low-capacitance, twisted, stranded, shielded copper wire. The maximum length is 2000 ft.

Install a BT485 terminator on the first and last controller on a network segment to add bias and prevent signal distortions due to echoing. See Fig. 85-87.

1. BACnet is a registered trademark of ASHRAE (American Society of Heating, Refrigerating, and Air-Conditioning Engineers).

To wire the UPC Open controller to the BAS network:

1. Pull the screw terminal connector from the controller's BAS Port.
2. Check the communications wiring for shorts and grounds.
3. Connect the communications wiring to the BAS port's screw terminals labeled Net +, Net -, and Shield.

NOTE: Use the same polarity throughout the network segment.

4. Insert the power screw terminal connector into the UPC Open controller's power terminals if they are not currently connected.
5. Verify communication with the network by viewing a module status report. To perform a module status report using the BACview keypad/display unit, press and hold the "FN" key then press the "." Key.

To install a BT485 terminator, push the BT485 on to the BT485 connector located near the BACnet connector.

NOTE: The BT485 terminator has no polarity associated with it.

To order a BT485 terminator, consult Commercial Products i-Vu® Open Control System Master Prices.

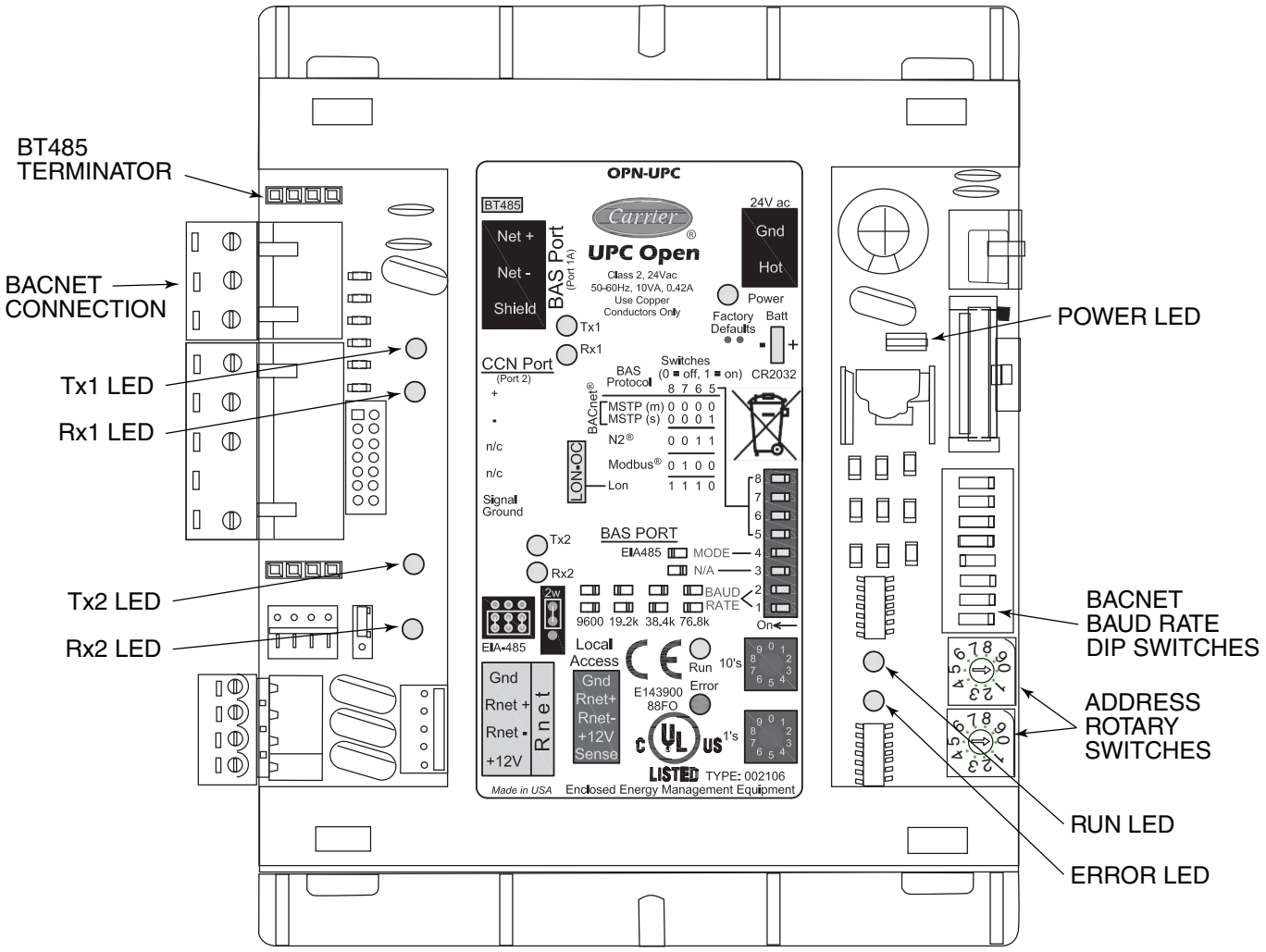

Fig. 85 — UPC Open Controller

MS/TP WIRING RECOMMENDATIONS — Recommendations are shown in Tables 31 and 32. The wire jacket and UL temperature rating specifications list two acceptable alternatives. The Halar[1] specification has a higher temperature rating and a tougher outer jacket than the SmokeGard[2] specification, and it is appropriate for use in applications where the user is concerned about abrasion. The Halar jacket is also less likely to crack in extremely low temperatures.

NOTE: Use the specified type of wire and cable for maximum signal integrity.

Smoke Control Modes — Rooftop units can be used for aid in building smoke control in the event of a building fire. The available functions include: Fire Shutdown, Pressurization, Evacuation, and Smoke Purge. These functions are enhanced when multiple rooftop units are used to zone a building. See Table 33 and Fig. 82 and 83.

FIRE SHUTDOWN — Fire Shutdown mode terminates all unit operation (cooling, heating, supply fan, and power exhaust). This mode prevents recirculation of contaminated air back into the space. The mode will not allow admission into the space of unsuitable outside air. See Fig. 82 for wiring.

1. Halar is a registered trademark of Solvay Plastics.
2. SmokeGard is a trademark of AlphaGary-Mexichem Corp.

PRESSURIZATION — Pressurization mode is intended to keep smoke out of a zone. The factory-installed optional economizer is required for this function. Pressurization is accomplished by the following:

- opening the economizer (option)
- running the supply fan (optional inlet guide vanes open or optional VFD at normal duct static pressure set point)
- closing the power exhaust dampers (if installed as option or accessory)
- shutting off the power exhaust fans (if installed as option or accessory)

This allows the space to be overpressurized relative to adjacent zones and prevents or slows entry of smoke into this space from adjacent zones. See Fig. 83 for wiring.

EVACUATION — Evacuation mode removes smoke or undesirable air from interior spaces without reintroducing unsuitable air. The factory-installed optional economizer with option/accessory power exhaust is required for this function. Evacuation is accomplished by the following:

- turning the supply fan off
- opening the economizer (option required)
- running the exhaust fans (option or accessory required)
- opening the exhaust dampers.

See Fig. 83 for wiring.

Table 31 — MS/TP Wiring Recommendations

SPECIFICATION	RECOMMMENDATION
Cable	Single twisted pair, low capacitance, CL2P, 22 AWG (7x30), TC foam FEP, plenum rated cable
Conductor	22 or 24 AWG stranded copper (tin plated)
Insulation	Foamed FEP 0.015 in. (0.381 mm) wall 0.060 in. (1.524 mm) O.D.
Color Code	Black/White
Twist Lay	2 in. (50.8 mm) lay on pair 6 twists/foot (20 twists/meter) nominal
Shielding	Aluminum/Mylar shield with 24 AWG TC drain wire
Jacket	SmokeGard Jacket (SmokeGard PVC) 0.021 in. (0.5334 mm) wall 0.175 in. (4.445 mm) O.D. Halar Jacket (E-CTFE) 0.010 in. (0.254 mm) wall 0.144 in. (3.6576 mm) O.D.
DC Resistance	15.2 Ohms/1000 feet (50 Ohms/km) nominal
Capacitance	12.5 pF/ft (41 pF/meter) nominal conductor to conductor
Characteristic Impedance	100 Ohms nominal
Weight	12 lb/1000 feet (17.9 kg/km)
UL Temperature Rating	SmokeGard 167°F (75°C) Halar -40 to 302°F (-40 to 150°C)
Voltage	300 Vac, power limited
Listing	UL: NEC CL2P, or better

LEGEND

AWG — American Wire Gage
CL2P — Class 2 Plenum Cable
DC — Direct Current
FEP — Fluorinated Ethylene Polymer
NEC — National Electrical Code
O.D. — Outside Diameter
TC — Tinned Copper
UL — Underwriters Laboratories

Table 32 — Open System Wiring Specifications and Recommended Vendors

WIRING SPECIFICATIONS		RECOMMENDED VENDORS AND PART NUMBERS			
Wire Type	**Description**	**Connect Air International**	**Belden**	**RMCORP**	**Contractors Wire and Cable**
MS/TP Network (RS-485)	22 AWG, single twisted shielded pair, low capacitance, CL2P, TC foam FEP, plenum rated. See MS/TP Installation Guide for specifications.	W221P-22227	—	25160PV	CLP0520LC
	24 AWG, single twisted shielded pair, low capacitance, CL2P, TC foam FEP, plenum rated. See MS/TP Installation Guide for specifications.	W241P-2000F	82841	25120-OR	—
Rnet	4 conductor, unshielded, CMP, 18 AWG, plenum rated.	W184C-2099BLB	6302UE	21450	CLP0442

LEGEND

AWG — American Wire Gage
CL2P — Class 2 Plenum Cable
CMP — Communications Plenum Rated
FEP — Fluorinated Ethylene Polymer
TC — Tinned Copper

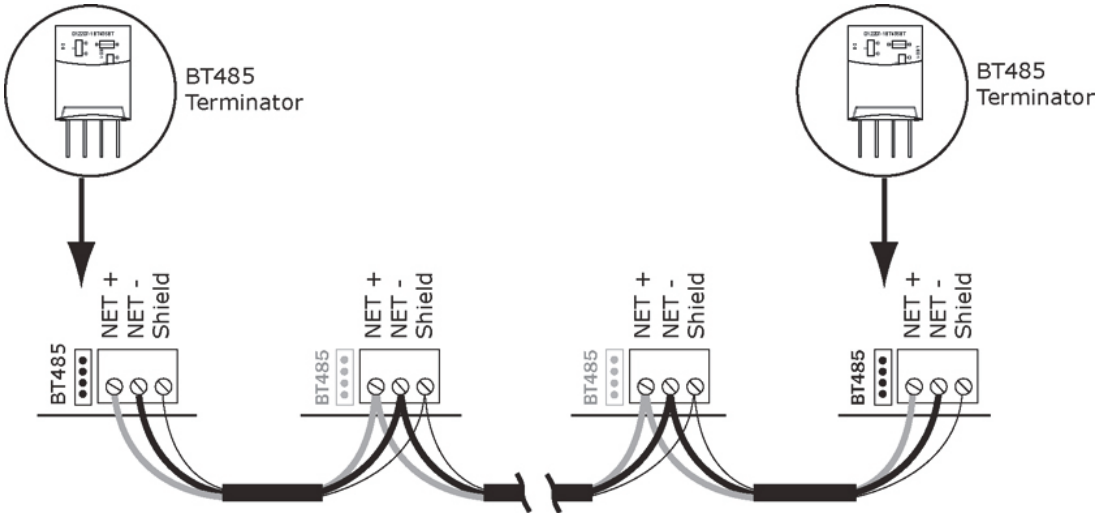

Fig. 86 — Open System Network Wiring

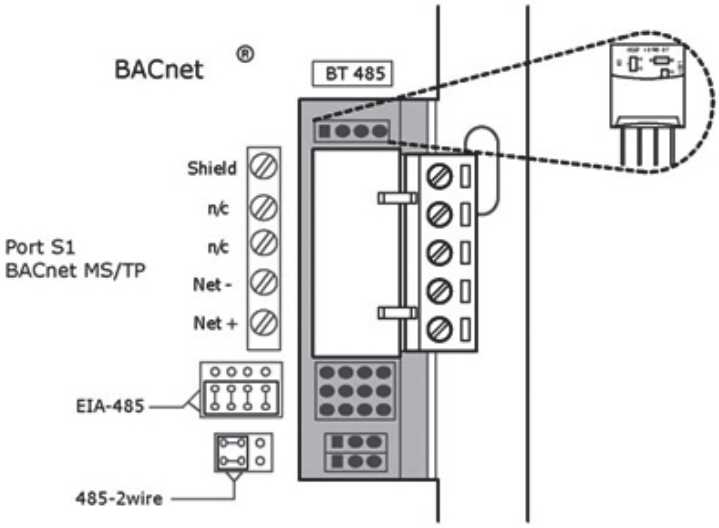

Fig. 87 — BT485 Installation

SMOKE PURGE — Smoke Purge mode removes smoke from the interior spaces and replaces it with fresh outside air. The factory-installed optional economizer with option/accessory power exhaust are required for this function. Smoke purge is accomplished by the following:

- turning supply fan on
- opening the economizer (option required)
- running the exhaust fans (option or accessory required)
- opening the exhaust dampers

See Fig. 83 for wiring.

SMOKE CONTROL INSTALLATION — Implementation of the various smoke control modes on these units requires the installer to modify the unit wiring to add contacts (via either manual switches or relays) that will selectively interrupt and override standard factory control sequences. See Table 33 and Fig. 82 and 83 for more information.

Table 33 — Smoke Control Modes

FUNCTION	MODE			
	Fire Shutdown	Pressurization	Evacuation*	Smoke Purge*
Supply Fan	Off	On	Off	On
VFD†	—	Open/On	—	Open/On
Economizer	Closed	Open	Open	Open
Return Air Damper	Open	Closed	Closed	Closed
Exhaust Fans	Off	Off	On	On
Exhaust Damper	Closed	Closed	Open	Open

LEGEND

VAV — Variable Air Volume
VFD — Variable Frequency Drive

*Power exhaust option required for this mode.
†Applicable to VAV units with appropriate options.

© Carrier Corporation 2018